VERITAS NetBackup™ 5.1

Media Manager System Administrator's Guide

for UNIX

N12316B

Disclaimer

The information contained in this publication is subject to change without notice. VERITAS Software Corporation makes no warranty of any kind with regard to this manual, including, but not limited to, the implied warranties of merchantability and fitness for a particular purpose. VERITAS Software Corporation shall not be liable for errors contained herein or for incidental or consequential damages in connection with the furnishing, performance, or use of this manual.

VERITAS Legal Notice

Copyright © 1993-2004 VERITAS Software Corporation. All rights reserved. VERITAS, VERITAS Software, the VERITAS logo, VERITAS NetBackup, VERITAS Backup Exec, and all other VERITAS product names and slogans are trademarks or registered trademarks of VERITAS Software Corporation.VERITAS, the VERITAS Logo, VERITAS NetBackup Reg. U.S. Pat. & Tm. Off. Other product names and / or slogans mentioned herein may be trademarks or registered trademarks of their respective companies.

Portions of this software are derived from the RSA Data Security, Inc. MD5 Message-Digest Algorithm. Copyright 1991-92, RSA Data Security, Inc. Created 1991. All rights reserved.

VERITAS Software Corporation
350 Ellis Street
Mountain View, CA 94043
USA
Phone 650–527–8000 Fax 650–527–2901
www.veritas.com

Third-Party Copyrights

ACE 5.2A: ACE(TM) is copyrighted by Douglas C.Schmidt and his research group at Washington University and University of California, Irvine, Copyright (c) 1993-2002, all rights reserved.

IBM XML for C++ (XML4C) 3.5.1: Copyright (c) 1999,2000,2001 Compaq Computer Corporation; Copyright (c) 1999,2000,2001 Hewlett-Packard Company; Copyright (c) 1999,2000,2001 IBM Corporation; Copyright (c) 1999,2000,2001 Hummingbird Communications Ltd.; Copyright (c) 1999,2000,2001 Silicon Graphics, Inc.; Copyright (c) 1999,2000,2001 Sun Microsystems, Inc.; Copyright (c) 1999,2000,2001 The Open Group; All rights reserved.

Permission is hereby granted, free of charge, to any person obtaining a copy of this software and associated documentation files (the "Software"), to deal in the Software without restriction, including without limitation the rights to use, copy, modify, merge, publish, distribute, and / or sell copies of the Software, and to permit persons to whom the Software is furnished to do so, provided that the above copyright notice(s) and this permission notice appear in all copies of the Software and that both the above copyright notice(s) and this permission notice appear in supporting documentation.

This product includes software developed by the Apache Software Foundation (http: / / www.apache.org /).

JacORB 1.4.1: The licensed software is covered by the GNU Library General Public License, Version 2, June 1991.

Open SSL 0.9.6: This product includes software developed by the OpenSSL Project * for use in the OpenSSL Toolkit. (http: / / www.openssl.org /)

TAO (ACE ORB) 1.2a: TAO(TM) is copyrighted by Douglas C. Schmidt and his research group at Washington University and University of California, Irvine, Copyright (c) 1993-2002, all rights reserved.

Contents

Preface . . . . . **xxix**

What Is In This Guide? xxix

How To Use This Guide xxx

Getting Help xxxi

NetBackup Manuals xxxii

Related Resources xxxv

Glossary xxxv

Accessibility Features xxxv

Conventions xxxvi

Chapter 1. Introduction to Media Manager **1**

Media Manager Terminology 1

Media Manager Features 5

Media Manager Hosts 6

Master Servers 6

Media Servers 7

SAN Media Servers 7

Volume Database Host 7

Global Device Database Host 8

Media Manager Administrator and User Interfaces 9

Java Administrative GUI 9

Starting the Java Administration Interface 10

Shortcut Menus 12

Menu-Based Administrative Interfaces 12

Command Line Administrative Interfaces (CLI) 12
The Device Configuration Wizard 13
The Volume Configuration Wizard 13
The Shared Drive Wizard 13
Device and Media Configuration Overview 13
Using Media Manager 14
Requesting Volumes 15
Checking Barcodes 15
Volume Pools 16
Security Issues 16

Chapter 2. Configuring Storage Devices 17
Starting Device Management 18
Using the Device Management Window 18
Menus and Commands 19
Toolbars 21
Tree Pane 22
Global Topology Pane 22
Topology Icons 23
Topology Connections 24
Selecting Topology Objects 24
Devices Pane 25
Managing the Devices Pane 25
Using the Drives Tab 25
Using the Robots Tab 29
Using the Hosts Tab 30
Messages Pane 31
Shortcut Menus and Commands 31
Customizing the Window 32
Viewing and Rearranging Columns 32

Changing the View of the Topology Pane 33
Allowable Media Manager Characters 34
Performing Initial Device Configuration 34
Managing the Device Manager Service (Windows) or the Device Daemon (UNIX) . . 35
The Device Mapping File 36
NetBackup Mixed Server Configurations 36
Administering Devices on Other Servers 37
Remote Administration of Other UNIX Servers 39
Administration Example 39
Adding SERVER Entries in the NetBackup bp.conf File 39
Media Manager Security 40
vmd Considerations 40
Example SERVER Entries 41
The Global Device Database Host 42
A Single Host is Required 42
How This Host is Determined 42
Managing The Global Device Database Host 43
Why You Should Use the Media Manager Wizards 44
The Device Configuration Wizard 45
Operating System Changes 46
Possible Global Device Database Host Conflict 46
Configuring Devices not Supported by the Wizard 46
Managing Devices that are Partially-Configured 46
Learning More About the Device Configuration Wizard 47
Starting the Device Configuration Wizard 47
Adding Robots 47
Dialog Entries for Adding and Changing Robots 49
Device Host 49
Robot Type 49
Robot Number 50

Volume Database Host 51
Robot Control Section of the Dialog 51
Robot is controlled locally by this device host 54
Robot control is handled by a remote host 57
Robot control is attached to an NDMP host 58
Adding Shared Drives 59
Using the Device Configuration Wizard to Configure Shared Drives 59
Using The Shared Drive Wizard to Configure Shared Drives 60
Learning More About the Shared Drive Wizard 60
Starting the Shared Drive Wizard 60
Using Alternate Interfaces to Configure Shared Drives 60
tpconfig menus 61
tpconfig Command Line Interface 61
Adding Drives 61
Dialog Entries for Adding (or Changing Drives) 62
Device Host Section of the Dialog 63
Device Host 63
Drive Information Section of the Dialog 63
Drive Name 64
Drive Type 64
Device Name 64
No Rewind Device 64
Character Device 65
Volume Header Device 65
Cleaning Frequency 65
Drive Status 66
Drive Is In A Robotic Library 66
Robotic Drive Information Section of the Dialog 66
Robotic Library 67
Robot Drive Number 67

Managing Your Device Configuration 69
When to Perform Device Configuration Changes 70
Using the Device Configuration Wizard for Configuration Changes 70
Changing a Robot Configuration 70
Changing the Configuration of a Drive 71
Changing a Non-Shared Drive to a Shared Drive 71
Changing the Volume Database Host for Standalone Drives 72
Deleting Robots 73
Deleting Drives 73
Drive Cleaning Functions 73
Using The Device Configuration Analyzer 75
Learning More About the Device Analyzer 75
Starting the Device Analyzer 76
Performing Drive Diagnostics 76
Executing Diagnostic Tests for a Drive 76
Exiting a Diagnostic Test When Testing is Complete 78
Stopping a Diagnostic Test and Changing the Drive to be Tested 78
Obtaining Detailed Information For a Particular Test Step 78
Managing a Test Step that Requires Operator Intervention 78
Using SANPoint Control to Investigate SAN Problems 79
Printing Your Device Configuration 80
Robot and Drive Configuration Examples 81
Example 1: Configuring a Robot on a Server 81
Example 2: Configuring Standalone Drives on a Server 85
Example 3: Configuring a Robot Distributed Among Multiple Servers 88
Configuration on the Windows Server eel 89
Configuration on the Windows Server shark 90
Configuration on the UNIX Server whale 91
Example 4: Configuring An ACS Robot on a UNIX Server 92
Example 5: Configuring A TLH Robot on a UNIX Server 95

Example 6: Configuring A TLM Robot on a UNIX Server 97

Chapter 3. Managing Media 101

Starting Media Management 102

Using the Media Management Window 102

Menus and Commands 103

Toolbars 104

Tree Pane 105

Volumes Pane 106

Volume Pools List 107

Volume Groups List 108

Robots List 109

Volumes List 110

Messages Pane 114

Shortcut Menus and Commands 114

Customizing the Window 115

Allowable Media Manager Characters 115

Administering Media on Other Servers 116

Volume Database Best Practices 116

Determining the Volume Database Host for a Device 116

Managing Media on Other Servers 117

Configuring Volume Pools 118

Adding a New Volume Pool or Scratch Volume Pool 119

Adding a Scratch Volume Pool 120

Changing the Attributes of a Volume Pool 121

Changing a Volume Pool To be a Scratch Volume Pool 122

Changing the Volume Pool Assignment for a Volume 122

Deleting a Volume Pool 123

Methods Available for Injecting and Ejecting Volumes 124

Methods for Injecting Volumes into a Robot 124

When Adding New Volumes 124
When Moving Volumes 125
When Performing a Volume Configuration Update Using Robot Inventory . 125
Methods for Ejecting Volumes From a Robot 126
When Moving Volumes 126
Using the Eject Volumes From Robot Command 126
Inject and Eject Functions Available by Robot Type 127
Media Ejection Timeout Periods 128
Adding New Volumes 128
Methods Available for Adding Volumes 129
Robotic Volumes (Volumes Located in a Robot) 129
Standalone Volumes (Volumes To Be Used in Standalone Drives) 129
NetBackup Catalog Backup Volumes 130
Notes on Labeling NetBackup Volumes 130
Adding Volumes Using a Robot Inventory Update 131
Adding Volumes Using the Actions Menu 132
Dialog Entries for New Volumes 134
Media Type 134
Volume Is In a Robotic Library 135
Select Robot Section of the Dialog 135
Device Host 135
Robot 135
Number of Volumes (or Number of platters) 135
Media ID Naming Style 136
Media ID or First Media ID 136
Partner ID 137
Media Description 137
First Slot Number 137
Maximum Mounts or Maximum Cleanings 138
Volume Group 138

Volume Pool 139
Label Optical Media 140
Inject Volume Into Robot via the Media Access Port 140
Using the Volume Configuration Wizard 140
Learning More About the Volume Configuration Wizard 141
Starting the Volume Configuration Wizard 141
Moving Volumes 141
Moving Volumes Using the Robot Inventory Update Option 142
Moving Volumes Using the Actions Menu 142
Dialog Entries for Move Volumes 143
Volumes to Move 144
Volume Is In a Robotic Library 144
Select Robot Section of the Dialog 145
Device Host 145
Robot 145
Volume Group 145
First Slot Number 146
Eject Volume From Robot via the Media Access Port 146
Inject Volume Into Robot via the Media Access Port 147
When to Delete Volumes 147
Deleting Volumes 148
Deleting a Volume Group 148
Ejecting Volumes From Robots (Actions Menu Command) 149
Labeling Media 150
Erasing Media Functions 151
SCSI Quick Erase 151
SCSI Long Erase 152
Erasing Media 152
Deassigning Volumes 153
Determining Which Application is Using a Volume 153

Deassigning NetBackup Volumes 154
Deassigning NetBackup Regular Backup Volumes 154
Deassigning NetBackup Catalog Backup Volumes 154
Deassigning Storage Migrator Volumes 155
Changing the Attributes for a Volume 155
Dialog Entries for Change Volumes 156
Maximum Mounts 157
Expiration Date 157
Description 158
Volume Pool 158
Number of Cleanings Remaining 159
Changing the Volume Group of a Volume 159
Moving A Volume Group 160
Exchanging Volumes 162
Exchanging a Volume and Using a New Media ID 162
Exchanging a Volume and Using the Old Media ID 163
Recycling Volumes 163
Recycling Volumes Using the Existing Media ID 164
Recycling Volumes Using a New Media ID 164

Chapter 4. Managing Media in Robots 165
Overview of Robot Inventory Operations 165
Accessing the Robot Inventory Dialog 167
Showing the Contents of a Robot 169
How Contents Reports for API Robots are Generated 170
ACS Robots 170
LMF Robots 171
RSM Robots 171
TLH Robots 171
TLM Robots 172

Comparing Robot Contents with the Volume Configuration 172
Compare Volume Configuration Reports 173
Updating the Volume Configuration for a Robot 174
When to Use Update Volume Configuration 175
When Not to Use Update Volume Configuration 176
Updating the Volume Configuration for Non-Barcoded Media 177
Procedure To Update the Volume Configuration 177
Example Update Volume Configuration Reports 179
Media Settings Tab (Advanced Options) 180
Setting Media Options 181
Properties for the Media Settings Tab 181
Media Which Have Been Removed From the Robot 182
Media Which Have Been Moved Into or Within the Robot 183
Use the Following Media ID Prefix 184
Label Optical Media (Local Host Only) 185
Use Barcode Rules 186
Media Type 186
Volume Pool 190
Barcode Rules Tab (Advanced Options) 191
Adding a New Barcode Rule 192
Changing a Barcode Rule 193
Deleting a Barcode Rule 193
Dialog Properties for Adding or Changing Barcode Rules 193
Media ID Generation Tab (Advanced Options) 197
Adding a New Media ID Generation Rule 198
Changing a Media ID Generation Rule 199
Deleting a Media ID Generation Rule 199
Dialog Properties for Adding or Changing Media ID Generation Rules 199
Media Type Mappings Tab (Advanced Options) 201
How the Mapping Defaults Shown on the Tab are Determined 201

Using the Tab to Change Media Type Mappings 201
Adding Mapping Entries to vm.conf 203
Default and Allowable Media Types for API Robots 203
Examples of Updating a Volume Configuration 208
Example 1: Removing a Volume from a Robot 208
Example 2: Adding Existing Standalone Volumes to a Robot 210
Example 3: Moving Existing Volumes Within a Robot 212
Example 4: Adding New Volumes to a Robot 214
Example 5: Adding Cleaning Tapes to a Robot 216
Example 6: Moving Existing Volumes Between Robots 217
Example 7: Adding Existing Volumes when Barcodes are Not Used 218
Rescanning and Updating Barcodes for a Robot 220
When to Use Rescan / Update 221
When Not to Use Rescan / Update 221
Procedure To Rescan / Update Barcodes 221

Chapter 5. Monitoring Storage Devices 223
Starting the Device Monitor 224
Using the Device Monitor Window 224
Menus and Commands 225
Toolbars 228
Drives Status Pane 228
Pending Requests Pane 232
Messages Pane 235
Shortcut Menus and Commands 235
Customizing the Window 235
Allowable Media Manager Characters 236
Controlling the Media Manager Device Daemon 236
Monitoring Devices on Other Servers 237
Changing the Operating Mode of a Drive 238

Changing Mode Example 239
Resetting a Drive 240
Drive Cleaning Functions 241
Adding or Changing a Drive Comment 243
Handling Pending Requests and Pending Actions 243
Pending Requests 244
Pending Actions 244
Resolving Pending Requests 245
Resolving a Pending Request Example (Drive in AVR mode) 246
Resolving Pending Actions 247
Resubmitting Requests 248
Denying Requests 249
Using The Device Configuration Analyzer 249
Learning More About the Device Analyzer 250
Starting the Device Analyzer 250
Shared Storage Option Summary Reports 250

Chapter 6. Managing the Media Manager Daemons 253
Overview of Media Manager Daemons 253
Robotic Daemons and Robotic Control Daemons 253
Library Sharing (or Robot Sharing) 254
Media Manager Device Daemon (ltid) 255
Starting the Device Daemon 255
Stopping the Device Daemon 255
Automatic Volume Recognition Daemon (avrd) 256
Media Manager Volume Daemon (vmd) 256
Robotic Daemons 257
Starting and Stopping Robotic Daemons 260
Displaying Process Status using the vmps Script 261
Logging of Errors 261

Chapter 7. Tape I/O Commands 263

Requesting Tapes 263

drive_mount_notify Script 264

tpreq Example 264

Reading and Writing Tape Files 264

Positioning Tape Files 265

Rewinding Tape Files 265

Removing Tape Files 265

drive_unmount_notify Script 266

Using an Optical Disk 266

External Access to Media Manager Controlled Devices 267

User Error Messages 268

Chapter 8. Shared Storage Option (SSO) Topics 269

What is SSO? 269

An Extension of Media Manager 270

A SAN is not Required for SSO 270

Sample SSO Configuration with SAN Components 270

Configuring and Verifying Your SSO Hardware 271

Using the Media Manager Device Configuration Guide 272

Configuration Tasks 272

Verifying Your Hardware is Connected and Working 273

Installing the Shared Storage Option 274

System Requirements for SSO 274

Volume Database Host (Device Allocation Host) Requirements 275

Supported Robot Types for SSO 275

Supported Media Servers for SSO 275

SSO Restrictions and Limitations 276

SSO Installation 277

Configuring SSO in NetBackup 277

Configuring SSO Devices in Media Manager 278
Device Configuration Wizard Limitations 278
Shared Drive Wizard Limitations 278
Configuring NetBackup Storage Units and Backup Policies 279
Configuring Storage Units for Each Media Server 279
Configuring a Backup Policy for Each Media Server 279
Verifying Your SSO Configuration 279
Using Media Manager with SSO 282
Using the Device Monitor with SSO 283
The Drive Status Pane 283
Changing the Operating Mode for a Shared Drive 283
Adding or Changing a Comment for a Shared Drive 283
Performing Drive Cleaning Functions for a Shared Drive 283
The Device Configuration Analyzer 284
Shared Storage Option Summary Reports 284
Adding SSO Configuration Options 284
Troubleshooting SSO Issues 284
Hardware Configuration Guidelines 284
Media Manager Configuration Guidelines 285
Operating System Help 286
Common Configuration Issues with SSO 286
Frequently Asked Questions About SSO 288
SSO Reference Topics 289
SSO-Related Terms and Concepts 289
Shared Drive 289
Backup Exec Shared Storage Option 289
Library Sharing or Robot Sharing 289
Media Servers and NetBackup SAN Media Servers 289
SSO Components in Media Manager 289
vmd/DA 290

Example SSO Configuration Showing Media Manager Components 290
Scan Host 292
Device Allocation Host 293

Appendix A. Media Manager Reference Topics 295
NetBackup Media Manager Best Practices 296
General Practices 296
Media and Device Management Domain Management 297
Media Management 298
Device Management 298
Performance and Troubleshooting 300
Other Best Practices 300
NetBackup and Media Manager Databases 300
Media Manager Volume Database 301
Media Catalog 301
NetBackup Catalogs 301
Device Databases 302
Robot Overview 302
Media Manager Robot Types 302
Media Manager Media Types 304
Alternate Media Types 305
Robot Attributes 305
Table-Driven Robotics 317
Robotic Test Utilities 318
Frequently Asked Questions About Device Discovery 318
How NetBackup Uses SCSI Reserve/Release 321
Background Topics 321
NetBackup Releases Prior to NetBackup 4.5 322
NetBackup 4.5 and Later Releases 322
SCSI Reserve/Release Commands 322

How NetBackup Uses SCSI Reserve/Release Commands 323
Issuing the Reserve 323
Checking for Data Loss 323
Checking for Tape/Driver Configuration Errors 324
Issuing the Release 325
SCSI Reserve/Release Logging and Conflict Notification 326
Issuing Reset Commands to Break a Reservation 327
Controlling SCSI Reserve/Release 328
SCSI Reserve/Release Requirements and Limitations 328
Correlating Device Files to Physical Drives When Adding Drives 329
On Windows Hosts 329
On UNIX Hosts 331
Drive Cleaning 332
Available Types of Cleaning 333
Reactive Cleaning (TapeAlert) 333
Requirements for Using TapeAlert with Media Manager 334
TapeAlert and Media Manager 334
TapeAlert and Frequency-Based Cleaning 334
Library-Based Cleaning 335
Frequency-Based Cleaning 335
Frequency-Based Cleaning Limitations 335
Managing Frequency-Based Cleaning 336
Operator-Initiated Cleaning 336
Using a Cleaning Tape 337
Volume Pools and Volume Groups 337
Volume Pools 338
Volume Groups 338
Rules for Assigning Volume Groups 338
Volume Pool and Volume Group Example 339
Scratch Volume Pools 340

Scratch Pool Example 341
Scratch Pool Usage 341
Moving Volumes 342
Move Operations 342
Physical and Logical Moves 343
Barcodes 343
Barcode Advantages 344
Barcode Best Practices 344
Barcode Rules 345
Media Manager Actions for Barcodes 345
Example Barcode Rules 346
Media ID Generation Rules 347
Using the Physical Inventory Utility for Non-Barcoded Media 348
Why Use vmphyinv? 348
Features 348
Requirements and Restrictions 349
When to Use vmphyinv 349
How vmphyinv Performs a Physical Inventory 350
Obtaining a List of Drives Used to Mount the Media 351
Obtaining a List of Media to be Mounted 351
Mounting Media and Reading the Tape Header 353
Updating the Media Manager Volume Database 354
Making Changes to Your Hardware Configuration 357
Replacing Devices in a SSO Configuration 357
Decommissioning a Media Server 358
Labeling Media 360
Pre-labeling of Media 360
Mounting and Unmounting of Media 361
Suspending Media Or Downing Devices 361
How Media Manager Selects a Drive for a Robotic Mount Request 361

How NetBackup Selects Media in Robots 362
Spanning Media 363
How NetBackup Selects Media in Standalone Drives 364
Media Selection Using Standalone Drive Extensions 364
Disabling Standalone Drive Extensions 365
Spanning Media 365
Keeping Standalone Drives in the Ready State 366
Media Formats 366
Non-QIC Tape Format 367
QIC Tape Format 367
Optical Media Format 367
Fragmented Backups 367
Multiplexing Format 368
Spanning Tapes 368
Media Manager Security 369
NetBackup Authentication / Authorization 369
Media Manager Authentication / Authorization 370
No vm.conf Entry Present 370
vm.conf Entry is Present 371
Media Manager Security (Using SERVER Configuration Entries) 371
Possible NetBackup and Media Manager Conflicts 372
Media Manager Enhanced Authorization 372
Supported Commands and Daemons 373
Allowing Enhanced Authorization 374
Enabling Robot Authorization 374
Administrators Quick Reference 374
Media Manager Commands 375
Media Manager Log Files 378
The Media Manager Configuration File (vm.conf) 379
ACS Media Mapping 380

ACSSEL Listening Socket 381
ACSSSI CSI Host Port 381
ACSSSI Host Name 382
ACSSSI Inet Port 382
ACSSSI Listening Socket 383
Adjacent LSM Specification for ACS Robots 383
API Robot Barcode Rule Enable 384
Authorization Required 384
Automatically Empty Robot MAP 385
AVRD Scan Delay 385
AVRD Pending Status Delay 385
Cleaning Drives Timeout 386
Client Port Range 386
Connect to Firewall Options 386
DAS Client Name 387
Days To Keep Debug Logs 388
Device Host Entries 388
Disallow Non-NDMP Request on NDMP Drive 388
Do Not Eject Standalone Tapes 389
Enable Automatic Path Remapping 389
Enable Robot Authorization 389
Inventory Robot Filter 390
LMF Media Mapping 390
Media Access Port Default for ACS Robots 391
Media ID Generation 391
Media ID Prefix 392
Not Allowing a Host To Manage Databases 393
Preferred Group 393
Prevent Media Removal (for TL8 Robots) 393
Random Port Numbers 394

Cluster Name, Media Manager Name, Required Network Interface 394
Return Media to the Scratch Pool 395
Scratch Pool Configuration 395
Server Entry 396
SSO DA Re-register Interval 396
SSO DA Retry Time 396
SSO Host Name 397
SSO Scan Ability Factor 397
TLH Media Mapping 398
TLM Media Mapping 398
Vault Media Description Reset 399
Verbose Message Logging 399
Example vm.conf File 399

Appendix B. Using tpconfig 401

Terms and Concepts 401
Robot Number 401
Robotic Control Path 401
Host Name 402
No Rewind On Close Device Name 402
Character Device Name 402
Volume Header Device Name 403
Drive Status 403
Volume Database Host Name 403
Starting the tpconfig Utility 403
Adding Robots 405
Adding Drives 406
Updating Robot and Drive Configurations 408
Updating Robot Configurations 408
Updating Drive Configurations 408

Deleting Drives and Robots 409
Deleting Drives 409
Deleting Robots 410
Specifying the Volume Database Host 410
Multiple Volume Database Hosts 411
Displaying and Printing Your Device Configuration 411

Appendix C. Using the Media Management Utility (vmadm) 413
Starting vmadm 413
Starting and Stopping vmd 413
The vmadm Main Menu 414
Configuring Volume Pools 415
Adding Volumes for Standalone Drives 418
Adding a Single Standalone Volume 418
Adding a Range of Standalone Volumes 421
Adding Volumes to a Robot 424
Auto-Populating a Robot 424
Using Auto-Populate 425
Adding a Single Volume to a Robot (Without Auto-Populate) 426
Adding a Range of Volumes to a Robot (Without Auto-Populate) 429
Displaying the Volume Configuration 432
Moving Volumes 435
Moving Volumes (With Inventory and Update) 435
Moving a Single Volume (Without Inventory and Update) 436
Moving Multiple Volumes 438
Moving a Volume Group 440
Deleting a Single Volume 441
Deleting Multiple Volumes 442
Deleting a Volume Group 443
Changing a Volume's Description 444

Changing a Volume's Volume Pool 444
Changing the Expiration Date for Volumes 445
Changing the Volume Group for Volumes 446
Change Vault Name for Volumes 447
Change Date Volumes are Sent to Vault 447
Change Date Volumes Return from Vault 448
Change Vault Slot for Volumes 449
Change Vault Session ID for Volumes 449
Setting the Maximum Mounts for Volumes 450
Changing the Cleanings Allowed for a Cleaning Tape 450
Updating Barcodes for Selected Volumes in a Robot 451
Inventory and Report Robot Volume Configuration 452
Inventory and Compare Robot Volume Configuration 454
Inventory and Update Robot Volume Configuration 456
To Inventory and Update Robot Volume Configuration 457
Changing Update Options 460
Configuring Barcode Rules 467
Barcode Rule Sorting 468
Barcode Rule Examples 468
Barcode Rule Menu 469
Adding a Barcode Rule 469
Changing a Barcode Rule 471
Deleting a Barcode Rule 471
Listing Barcode Rules 471
Formatting Optical Disks 472

Appendix D. STK Automated Cartridge System (ACS) 473
Sample ACS Configuration 474
Media Requests 475
Configuring ACS Robotic Control 476

Configuring ACS Drives 476
Configuring Shared ACS Drives 478
Using the STK SN6000 479
Should SN6000 Drives Be Configured as Shared Drives? 480
Hosts Connected To a Single Port 480
Hosts Connected To Different Ports 480
Adding Volumes 481
Removing Volumes 481
Removing Volumes Using the STK Utility 482
Removing Volumes Using Media Manager 482
Robot Inventory Operations 482
Advanced ACS Robot Topics 484
ACS Daemon (acsd) 484
ACS Storage Server Interface (acsssi) 485
Using the ACS_SSI_SOCKET Environment Variable 485
Starting acsssi Manually 486
Optional Environment Variables 486
ACS SSI Event Logger (acssel) 487
Using acssel with a Different Socket Name 487
ACS Robotic Test Utility (acstest) 489
Making ACS Robotic Configuration Changes 489
Multiple ACS Robots with One ACS Library Software Host 490
Multiple ACS Robots and ACS Library Software Hosts 490
Robotic Inventory Filtering 491
Inventory Filtering Example 492

Appendix E. IBM Automated Tape Library (ATL) 493
Sample TLH Configurations 493
Media Requests for a TLH Robot 496
Configuring Robotic Control 497

Robotic Control on an AIX System 497
Determine the Path to the LMCP Device File 497
Verify Library Communications 498
Configure the Robotic Device File 499
Robotic Control on a Non-AIX System 499
Determine the Library Name 499
Verify Library Communications 500
Configure the Robotic Device File 501
Configuring Drives for TLH Robots 501
Cleaning Drives 503
Adding Volumes 503
Removing Volumes 503
Robot Inventory Operations 504
Robotic Inventory Filtering 505

Appendix F. ADIC Distributed AML Server/Scalar Distributed Library Controller 507

Sample TLM Configuration 507
Media Requests Involving a TLM Robot 509
Configuring TLM Robotic Control 509
Configuring TLM Drives on a DAS/SDLC Server 509
Installing ADIC Software for the Client Component 510
Configuring the DAS/SDLC Client Name 510
Allocating TLM Drives on a DAS Server 511
Configuring TLM Drives on a SDLC Server 512
Configuring TLM Drives in Media Manager 512
Configuring Shared TLM Drives 513
Configuring the ADIC DAS Server 513
Configuring the ADIC SDLC Server 514
Using the Device Configuration Wizard in Media Manager 515
Providing Common Access to Volumes 516

Adding Volumes 516
Removing Volumes 517
Robot Inventory Operations 517

Appendix G. Fujitsu Library Management Facility (LMF) 519
Sample LMF Configurations 519
Media Requests Involving an LMF Robot 523
Configuring Robotic Control 524
Determining the Library Name 524
Verifying Library Communications 525
Configuring Robotic Control 526
Configuring Drives for LMF Robots 527
Cleaning Drives 528
Adding Volumes 528
Removing Volumes 529
Robot Inventory Operations 529
Robotic Inventory Filtering 530

Index 531

Preface

This guide describes using the NetBackup Administration Console (Java administrative interface) to manage Media Manager software and its components on a UNIX server.

See "Introduction to Media Manager" on page 1 for a description of the other Media Manager administrative interfaces that are available. See the NetBackup release notes for information about the supported UNIX server platforms for NetBackup.

Media Manager is the component of VERITAS NetBackup™ and VERITAS Storage Migrator™ that is used to configure and manage media, drives, and robots that are used to store and retrieve your backup data.

This guide assumes you are familiar with the operating system of the server on which NetBackup and Media Manager is installed and UNIX systems in general.

What Is In This Guide?

This guide contains the following chapters:

- "Introduction to Media Manager" on page 1 provides an overview of Media Manager and the administrative interfaces that are available.
- "Configuring Storage Devices" on page 17 explains how to configure Media Manager software to manage the drives and robots at your site.
- "Managing Media" on page 101 contains topics on configuring Media Manager to use the media (volumes and volume pools) that Media Manager requires to store backups.
- "Managing Media in Robots" on page 165 explains how to configure Media Manager to use and manage the media in robots (using robot inventory).
- "Monitoring Storage Devices" on page 223 discusses operator tasks, such as how to assign a drive to a tape request.
- "Managing the Media Manager Daemons" on page 253 explains how to start and stop the device and media management daemons and how these daemons relate to each other.

- "Tape I/O Commands" on page 263 describes the commands for requesting tape mounts, writing files, and other user-related operations.
- "Shared Storage Option (SSO) Topics" on page 269 provides information on installing, configuring, and using the NetBackup Shared Storage Option on UNIX and Windows-based servers. SSO is an extension to tape drive allocation and configuration for NetBackup Media Manager.

In addition to these chapters, this guide contains the following appendixes and an index.

- "Media Manager Reference Topics" on page 295 provides background information on important Media Manager features and concepts.
- "Using tpconfig" on page 401 explains how to use the `tpconfig` utility for configuring robots and devices. `tpconfig` is a character-based menu utility.
- "Using the Media Management Utility (vmadm)" on page 413 explains how to use `vmadm` to define and administer media in the volume database. `vmadm` is a character-based menu utility.
- "STK Automated Cartridge System (ACS)" on page 473 explains how Media Manager works with StorageTek (STK) Automated Cartridge System robots.
- "IBM Automated Tape Library (ATL)" on page 493 explains how Media Manager works with the IBM Automated Tape Library to control Tape Library Half-inch (TLH) robots, including the IBM 3494 library.
- "ADIC Distributed AML Server/Scalar Distributed Library Controller" on page 507 explains how Media Manager works with the ADIC Distributed AML Server to control Tape Library Multimedia (TLM) robots, including the Grau AML Library.
- "Fujitsu Library Management Facility (LMF)" on page 519 explains how Media Manager works with robots under control of the Fujitsu Library Management Facility.

How To Use This Guide

Keep the following points in mind when using this guide.

- This guide is intended for use with NetBackup Server and NetBackup Enterprise Server. For readability in this guide, the term NetBackup refers to both NetBackup server types unless specifically noted.
- The term Storage Migrator refers to VERITAS Storage Migrator.
- Portions of this guide apply only to specific robot types (for example, API, RSM, or optical robots), server platforms (UNIX or Windows), or NetBackup server type (for example, NetBackup Enterprise Server).

  These topics are identified with the use of italics as in the following example:

This step is only applicable for NetBackup Enterprise Server.

- This guide is intended primarily for the system administrator, who probably will want to read every chapter.

  An operator should read the chapter "Monitoring Storage Devices" on page 223. A tape user, who has no responsibility for administration, may have an interest in reading the chapter "Tape I/O Commands" on page 263, which describes the user command interface and possibly the Media Manager overview in the chapter "Introduction to Media Manager" on page 1.

Getting Help

VERITAS offers you a variety of support options.

Accessing the VERITAS Technical Support Web Site

The VERITAS Support Web site allows you to:

- obtain updated information about NetBackup, including system requirements, supported platforms, and supported peripherals
- contact the VERITAS Technical Support staff and post questions to them
- get the latest patches, upgrades, and utilities
- view the NetBackup Frequently Asked Questions (FAQ) page
- search the knowledge base for answers to technical support questions
- receive automatic notice of product updates
- find out about NetBackup training
- read current white papers related to NetBackup

The address for the VERITAS Technical Support Web site follows:

- http://support.veritas.com

Subscribing to VERITAS Email Notification Service

Subscribe to the VERITAS Email notification service to be informed of software alerts, newly published documentation, Beta programs, and other services.

Go to http://support.veritas.com. Select a product and click "E-mail Notifications" on the right side of the page. Your customer profile ensures you receive the latest VERITAS technical information pertaining to your specific interests.

Accessing VERITAS Telephone Support

Telephone support for NetBackup is only available with a valid support contract. To contact VERITAS for technical support, dial the appropriate phone number listed on the Technical Support Guide included in the product box and have your product license information ready for quick navigation to the proper support group.

▼ **To locate the telephone support directory on the VERITAS web site**

1. Open http://support.veritas.com in your web browser.
2. Click the **Phone Support** icon. A page that contains VERITAS support numbers from around the world appears.

Accessing VERITAS E-mail Support

▼ **To contact support using E-mail on the VERITAS web site**

1. Open http://support.veritas.com in your web browser.
2. Click the **E-mail Support** icon. A brief electronic form will appear and prompt you to:
   - Select a language of your preference
   - Select a product and a platform
   - Associate your message to an existing technical support case
   - Provide additional contact and product information, and your message
3. Click **Send Message**.

Contacting VERITAS Licensing

For license information call 1-800-634-4747 option 3, fax 1-650-527-0952, or e-mail amercustomercare@veritas.com.

NetBackup Manuals

The following manuals, along with the online help, comprise the NetBackup documentation set:

For a complete list of related documents, see the NetBackup release notes. Depending on your configuration, other documents may also be required.

- *VERITAS NetBackup Commands for UNIX*

NetBackup_Commands_UNIX.pdf

Describes NetBackup commands and processes that can be executed from a UNIX command line.

- *VERITAS NetBackup Commands for Windows*

  NetBackup_Commands_Windows.pdf

  Describes NetBackup commands and processes that can be executed from a Windows command prompt.

- *VERITAS NetBackup Global Data Manager System Administrator's Guide for UNIX and Windows*

  NetBackup_AdminGuide_GDM.pdf

  Explains how to install, configure, and use Global Data Manager (GDM) for NetBackup products on UNIX and Windows-based operating systems.

- *VERITAS NetBackup Installation Guide for UNIX*

  NetBackup_Install_UNIX.pdf

  Explains how to install NetBackup software on UNIX-based platforms.

- *VERITAS NetBackup Installation Guide for Windows*

  NetBackup_Install_Windows.pdf

  Explains how to install NetBackup software on Windows-based platforms.

- *VERITAS NetBackup Media Manager Device Configuration Guide for UNIX and Windows*

  MediaMgr_DeviceConfig_Guide.pdf

  Explains how to add device drivers and perform other system-level configurations for storage devices and media servers (or SAN media servers) that are supported by NetBackup Media Manager.

- *VERITAS NetBackup Media Manager System Administrator's Guide for Windows*

  MediaMgr_AdminGuide_Win.pdf

  Explains how to configure and manage the storage devices and media on Windows servers running NetBackup. Media Manager is part of NetBackup.

- *VERITAS NetBackup for NDMP System Administrator's Guide*

  NetBackup_AdminGuide_NDMP.pdf

  Explains how to install, configure, and use NetBackup for NDMP to control backups on an NDMP host.

- *VERITAS NetBackup Release Notes for UNIX and Windows*

  NetBackup_Release_Notes.pdf

Provides important information about NetBackup on UNIX- and Windows-based servers, such as the platforms and operating systems that are supported and operating notes that may not be in the NetBackup manuals or the online help.

- *VERITAS NetBackup System Administrator's Guide for UNIX, Volume I*

  NetBackup_AdminGuideI_UNIXServer.pdf

  Explains how to configure and manage NetBackup on a UNIX server, including managing storage units, backup policies, catalogs and host properties.

- *VERITAS NetBackup System Administrator's Guide for UNIX, Volume II*

  NetBackup_AdminGuideII_UNIXServer.pdf

  Explains additional NetBackup features such as access control and enhanced authorization and authentication. The guide also discusses using NetBackup with AFS and Intelligent Disaster Recovery (IDR).

- *VERITAS NetBackup System Administrator's Guide for Windows, Volume I*

  NetBackup_AdminGuideI_WinServer.pdf

  Explains how to configure and manage NetBackup on a Windows server, including managing storage units, backup policies, catalogs and host properties.

- *VERITAS NetBackup System Administrator's Guide for Windows, Volume II*

  NetBackup_AdminGuideII_WinServer.pdf

  Explains additional NetBackup features such as access control and enhanced authorization and authentication. The guide also discusses using NetBackup with AFS and Intelligent Disaster Recovery (IDR).

- *VERITAS NetBackup Troubleshooting Guide for UNIX and Windows*

  NetBackup_Troubleshoot_Guide.pdf

  Provides troubleshooting information for UNIX- and Windows-based NetBackup products, including Media Manager.

- *VERITAS NetBackup Vault System Administrator's Guide for UNIX and Windows*

  NetBackup_AdminGuide_Vault.pdf

  Describes how to configure and use logical vaults and profiles to duplicate backups, perform catalog backups, eject media, and generate reports.

- *VERITAS Security Services(tm) Version 4.0 Administrator's Guide*

  VxSS_AdminGuide.pdf on the VERITAS Security Services CD-ROM.

  Explains how to configure and manage core security mechanisms, including authentication, protected communications, and authorization.

- *VERITAS Storage Migrator Release Notes for UNIX*

StoMigrator_ReleaseNotes_UNIX.pdf

Provides information, such as, the platforms and operating systems that are supported and operating notes that may not be in the Storage Migrator manuals.

- *VERITAS Storage Migrator System Administrator's Guide for UNIX*

  StoMigrator_AdminGuide_UNIX.pdf

  Explains how to configure and manage Storage Migrator on a UNIX server.

Related Resources

Glossary

If you encounter unfamiliar terminology, consult the NetBackup online glossary. The glossary contains terms and definitions for NetBackup and all additional NetBackup options and agents.

The NetBackup online glossary is included in the NetBackup help file.

▼ **To access the NetBackup online glossary**

1. In the NetBackup Administration Console, click **Help** > **Help Topics**.
2. Click the **Contents** tab.
3. Click **Glossary of NetBackup Terms**.

Use the scroll function to navigate through the glossary.

Accessibility Features

NetBackup contains features that make the user interface easier to use by people who are visually impaired and by people who have limited dexterity. Accessibility features include:

- Support for assistive technologies such as screen readers and voice input (Windows servers only)
- Support for keyboard (mouseless) navigation using accelerator keys and mnemonic keys

For more information, see the *NetBackup System Administrator's Guide for Windows, Volume I* or the *NetBackup System Administrator's Guide for UNIX, Volume I*.

Conventions

The following conventions apply throughout the documentation set.

Product-Specific Conventions

The following term is used in the NetBackup 5.1 documentation to increase readability while maintaining technical accuracy.

- Microsoft Windows, Windows

  Terms used to describe a specific product or operating system developed by Microsoft, Inc. Some examples you may encounter in NetBackup documentation are, Windows servers, Windows 2000, Windows Server 2003, Windows clients, Windows platforms, or Windows GUI.

  When Windows or Windows servers is used in the documentation, it refers to all of the currently supported Windows operating systems. When a specific Windows product is identified in the documentation, only that particular product is valid in that instance.

  For a complete list of Windows operating systems and platforms that NetBackup supports, refer to the *NetBackup Release Notes for UNIX and Windows* or go to the VERITAS support web site at `http://www.support.veritas.com`.

Typographical Conventions

Here are the typographical conventions used throughout the manuals:

Conventions

Convention	Description
GUI Font	Used to depict graphical user interface (GUI) objects, such as fields, listboxes, menu commands, and so on. For example: Enter your password in the **Password** field.

Conventions (continued)

Convention	Description
Italics	Used for placeholder text, book titles, new terms, or emphasis. Replace placeholder text with your specific text. For example: Replace *filename* with the name of your file. Do *not* use file names that contain spaces. This font is also used to highlight NetBackup server-specific or operating system-specific differences. For example: *This step is only applicable for NetBackup Enterprise Server.*
`Code`	Used to show what commands you need to type, to identify pathnames where files are located, and to distinguish system or application text that is displayed to you or that is part of a code example.
Key+Key	Used to show that you must hold down the first key while pressing the second key. For example: Ctrl+S means hold down the Ctrl key while you press S.

You should use the appropriate conventions for your platform. For example, when specifying a path, use backslashes on Microsoft Windows and slashes on UNIX. Significant differences between the platforms are noted in the text.

Tips, notes, and cautions are used to emphasize information. The following samples describe when each is used.

Tip Used for nice-to-know information, like a shortcut.

Note Used for important information that you should know, but that shouldn't cause any damage to your data or your system if you choose to ignore it.

Caution Used for information that will prevent a problem. Ignore a caution at your own risk.

Command Usage

The following conventions are frequently used in the synopsis of command usage.

brackets [ ]

The enclosed command line component is optional.

Vertical bar or pipe (|)

Separates optional arguments from which the user can choose. For example, when a command has the following format:

`command` *`arg1`*`|`*`arg2`*

In this example, the user can use either the *arg1* or *arg2* variable.

Navigating Multiple Menu Levels

When navigating multiple menu levels, a greater-than sign (>) is used to indicate a continued action.

The following example shows how the > is used to condense a series of menu selections into one step:

❖ Select **Start** > **Programs** > **VERITAS NetBackup** > **NetBackup Administration Console**.

The corresponding actions could be described in more steps as follows:

1. Click **Start** in the task bar.
2. Move your cursor to **Programs**.
3. Move your cursor to the right and highlight **VERITAS NetBackup**.
4. Move your cursor to the right. First highlight and then click **NetBackup Administration Console**.

Introduction to Media Manager 1

This chapter provides an overview of Media Manager and contains the following topics:

- Media Manager Terminology
- Media Manager Features
- Media Manager Hosts
- Media Manager Administrator and User Interfaces
- Device and Media Configuration Overview
- Using Media Manager
- Security Issues

When you are familiar with the features and the administration of NetBackup and Media Manager described in this guide, you should review the list of recommended practices. See "NetBackup Media Manager Best Practices" on page 296.

Media Manager Terminology

The following table contains key terms that are used in Media Manager documentation and help.

For the complete NetBackup glossary of terms, refer to the glossary that is included in the NetBackup help file. This glossary contains terms and definitions for NetBackup, and all additional NetBackup options and agents.

Term	Description
ADAMM database	(Advanced Device and Media Management). The Backup Exec database that maintains device and media information.

Term	Description
API robots	A group of Media Manager robot types where the robot-vendor software or the operating system (in the case of RSM robots) manage their own media. The following are the supported API robots for the NetBackup server types on UNIX servers and Microsoft Windows servers: ◆ NetBackup Server for Windows: RSM. ◆ NetBackup Enterprise Server for Windows: ACS, RSM, TLH, and TLM. ◆ NetBackup Server for UNIX: None. ◆ NetBackup Enterprise Server for UNIX: ACS, LMF, TLH, and TLM.
avrd	The Media Manager automatic volume recognition daemon on UNIX and process on Windows servers.
barcode	A label attached to the media that associates the media to its slot location in a robot. The alphanumeric barcode is also usually included on the magnetic label that is written on the media.
barcode rule	A rule that specifies criteria for assigning attributes to new robotic volumes.
device host	A host where a drive or robotic control is attached or is defined, that also has Media Manager installed.
drive status	A status indicating the condition or state of a drive.
global device database	A database that is the repository for global device configuration information. This information is used by Media Manager to automate device configuration and is the basis for the device configuration presented in the GUIs. The *global device database host* is the host where this database is located.
insert	A volume is physically placed in a robot without using an add or move option to update the volume database.
labeled volume	A volume with a recorded media ID (that is, the volume was labeled by NetBackup or Backup Exec).
library sharing	*Applies only to NetBackup Enterprise Server.* Allows different drives in a robot to be connected to different hosts. Also known as *robot sharing* or *remote robot control.*

Term	Description
ltid	The Media Manager device daemon on UNIX and the NetBackup Device Manager service on Windows.
Media and Device Management (MDM) domain	*Applies only to NetBackup Enterprise Server.* A domain that includes all of the servers listed in the global device database (this domain also includes the global device database host). The *Media and Device Management domain server* is the host where the Media Manager volume database, volume pool database, barcode rule database, and global device database for a domain are located.
media ID	An identifier used by Media Manager to track media.
media server	A server that can back up its own data or other clients on the network as well to devices.
media type	A Media Manager classification of tape or optical media with differing physical characteristics.
mount request	A request for a volume that is displayed in the Pending Requests pane. This means to make a volume available for reading or writing by placing it in an appropriate drive and then assigning the associated request to that drive.
NetBackup authentication	A NetBackup security level that verifies NetBackup client to server, or server to server access. Authentication also controls access to the services available on that host.
NetBackup authorization	A NetBackup security level that verifies if a NetBackup user (or groups of users) has permission to use the services available on that host. Authorization provides additional security over the security provided by authentication.
NetBackup media database	A database that contains media attributes (like media state and image expiration date) for media assigned to a particular NetBackup server. There is a media database located on each server that has (or had) drives connected to it and is also running NetBackup.
no rewind on close	A device name that applies to tape drives attached to (or controlled by) UNIX devices. This type of device remains at its current position on a close operation.
operator	A person responsible for performing manual intervention, for example mounting tapes.

Term	Description
pending actions	Special requests for operator assistance to complete a tape mount request, when the request causes an error.
residence information or *residence*	Attributes in the Media Manager volume database. This information shows the robotic location and includes the robot host, robot type, robot number, and slot location.
robot control host	*Applies only to NetBackup Enterprise Server.* The host that is providing the robotic control for a robot.
robot number	A unique, logical identification number of a robot.
robot type	Media Manager classification of robots, according to one of the following: the physical characteristics of the robot, the media type commonly used by that class of robots, or the communication methods used by the underlying robotics.
robotic control path	The control path to a robot through a SCSI connection.
robotic library or *robot*	A peripheral device that contains a mechanism for the automated mounting and dismounting of media in tape or optical disk drives. A robot may also be called a robotic library, media changer, automated library, jukebox, or tape stacker.
SAN media server	A server that can only back up its own data to devices. Backing up of data residing on other clients on a network is not allowed.
shared drive	*Applies only to NetBackup Enterprise Server.* A tape drive that is shared among hosts, when SSO is installed.
Shared Storage Option (SSO)	*Applies only to NetBackup Enterprise Server.* A NetBackup software option that allows individual tape drives (stand-alone or in a robotic library) to be dynamically shared between multiple NetBackup media servers (or SAN media servers).
standalone drive	A drive that is not in a robotic library.
system administrator	A person with typical UNIX or Windows administrator privileges and responsibilities.
unlabeled volume	A volume that does not have recorded media IDs.

Term	Description
user	A person or application (for example, NetBackup) that initiates Media Manager requests.
vmd	The Media Manager volume daemon on UNIX and the NetBackup Volume Manager service on Windows.
volume database	The database that is the repository for Media Manager volume configuration information. The *volume database host* is a Media Manager host where this database is located.
volume group	A logical grouping that identifies a set of volumes that reside at the same physical location.
volume pool	A logical grouping that identifies a set of volumes by their usage.

Media Manager Features

Media Manager is used by NetBackup and Storage Migrator to provide media and device management capabilities for tape and optical disk drives. These capabilities include the following:

- Media and device management interfaces that allow configuration of storage devices.
- Device monitor interfaces that display the current status of all defined tape devices and pending requests for volumes, allowing the operator to assign tapes or optical disks to the appropriate drives and respond to problems.
- Automatic scanning of devices for loaded media with automatic volume recognition of recorded volume labels.

Note Automatic volume recognition is the only aspect of ANSI labeled tapes that Media Manager supports. Once a tape is assigned to a request, all volumes are treated as unlabeled, and the user or application is responsible for reading or writing labels if applicable.

- Support of numerous robotic tape library and optical disk library devices that can automatically retrieve, mount, assign, unmount, and store removable volumes.
- A volume database containing location and other information about volumes that can be used to identify and retrieve volumes in the robotic devices.

- Allow any user to request and unmount a specific volume. See the NetBackup system administrator's guide for UNIX for details.
- Ability to inventory a robot, provide reports, and update the volume database to match the results of the inventory. This simplifies administration, by permitting you to quickly determine the contents of a robot and provides efficient media tracking.

  Media Manager can also inventory a robotic library that does not support barcodes or that contains volumes that do not have readable barcodes. In these cases, you can use the physical inventory utility (`vmphyinv`).
- The capacity to record media statistics. For example, the first and last time the volume was mounted, the date it was created, an expiration date, and the number of times the volume was mounted.
- Grouping volumes into volume pools for convenience and protection.
- Capability to perform automated drive cleaning, based on the TapeAlert feature or a frequency-based cleaning schedule. Cleaning tapes that are not configured correctly are also recognized.
- *The following capability applies only to NetBackup Enterprise Server.*

  Capability to automatically share tape drives across multiple hosts that have physical access to shared drives through appropriate hardware. This capability requires the installation of the Shared Storage Option (SSO). See "Shared Storage Option (SSO) Topics" on page 269 for more information.

Visit the VERITAS support web site for a list of the platforms and peripherals that Media Manager currently supports.

Media Manager Hosts

In the NetBackup Administration Console and in this guide, a Media Manager host (or server) is a UNIX or Microsoft Windows server that has NetBackup and Media Manager software installed. Media Manager software is automatically installed as part of the installation of NetBackup software.

Key Media Manager hosts are described in the following topics.

Master Servers

NetBackup and Media Manager support both master server and media servers. A master server manages the NetBackup backups, archives, and restores. Media servers typically provide additional storage by allowing NetBackup to use the storage devices that are attached.

A master server has Media Manager software installed.

The following point applies only to NetBackup Server.

NetBackup master and media server software are both installed on the same host. This is the host where NetBackup is installed. In this case, the host acts as both a master and a media server. All related databases are also located on that host.

The following point applies only to NetBackup Enterprise Server.

You can have multiple master and media servers in your configuration. Typically a master server controls multiple media servers. You should manage your media servers from the master server point of view.

Media Servers

A host with Media Manager software installed and devices attached is termed a media server. The use of Media servers can increase system performance by distributing network loads.

Media servers can also be referred to as device hosts. Regular media servers are licensed by VERITAS, and can back up their own data or data from other network clients. Also see "SAN Media Servers" on page 7.

The following points apply only to NetBackup Enterprise Server.

You can have multiple media servers in your configuration.

A media server can also just be a host that provides the robotic control for a robot (known as a robot control host).

SAN Media Servers

This is a NetBackup Enterprise Server topic.

VERITAS also licenses SAN media servers that can only back up their own data to shared drives—no backing up of data residing on other clients is allowed.

Volume Database Host

A volume database host is a Media Manager host where the volume database is located. This database is the repository for all Media Manager volume configuration information about the media in storage devices.

The following point applies only to NetBackup Server.

The Media Manager volume database is located on the host where NetBackup is installed.

The following points apply only to NetBackup Enterprise Server.

All servers where Media Manager is installed (even if the server does not have any drives or robots attached) can have volume databases and can contain volume information. VERITAS recommends that you centralize the information on one Media Manager host (this host is usually the NetBackup master server).

Caution Although it is possible to maintain separate volume databases on multiple hosts, administration of these databases is more difficult, as is merging the databases later. The `vmdb_merge` command can be used to merge volume, pool, and media databases. See the NetBackup commands guide for details.

Also, shared drive (SSO) configurations require that one volume database host is used for all servers where a shared drive is configured.

There should be only one volume database host per global device database host (see "Global Device Database Host" on page 8), and both of these key databases should be located on the same server. This server is known as the Media and Device Management Domain (MDM Domain) server.

Global Device Database Host

This is a NetBackup Enterprise Server topic.

The global device database host is a Media Manager host where the global device database is located. This database is the repository for Media Manager device configuration information.

The following methods are typically used to configure devices:

- Device discovery (Device Configuration wizard)
- Auto-configuration (Device Configuration wizard)
- Manual configuration (using the NetBackup Administration Console or `tpconfig`)

For device configuration to work properly (particularly where devices are connected to many servers) a single host must serve as the repository for this global device configuration information.

Also, there should be only one volume database host (see "Volume Database Host" on page 7) per global device database host and both of these key databases should be located on the same server. This server is known as the Media and Device Management Domain (MDM Domain) server.

When you install NetBackup, the default option is to have the master server configured to be the global device database host. If your environment contains multiple master servers, you can designate a different server to be your global device database host during the installation.

The `tpautoconf` command has options to preview and merge existing device databases. See the NetBackup commands guide for details.

Media Manager Administrator and User Interfaces

The following table shows the Media Manager administrative interface choices that are available. The terminology, general Media Manager concepts, and results are the same, regardless of which interface you use.

Media Manager Administrative Interfaces

	Java GUI	**Menus**		**CLI**	**Wizards**
Task	**jnbSA**	**tpconfig**	**vmadm**		
Configure Devices	X	X		X	X
Configure Media	X		X	X	X
Manage Devices	X			X	

See the following sections for more information:

- "Java Administrative GUI" on page 9.
- "Menu-Based Administrative Interfaces" on page 12.
- "Command Line Administrative Interfaces (CLI)" on page 12.
- "The Device Configuration Wizard" on page 13.
- "The Volume Configuration Wizard" on page 13.
- "The Shared Drive Wizard" on page 13.

Note For ease of use, the wizards are recommended for device and media configuration.

Java Administrative GUI

The NetBackup Administration Console allows you to configure and manage media and devices from one main interface. This interface is supported on certain UNIX platforms.

See the NetBackup release notes for information on platform support, and configuring and using the NetBackup Administration Console on UNIX.

Starting the Java Administration Interface

1. To start the NetBackup Administration Console (the Java administrative interface) enter the following command. The NetBackup Administration Console appears on your workstation.

   ```
   /usr/openv/netbackup/bin/jnbSA
   ```

   The NetBackup Administration Console is the starting point for administering NetBackup. The left pane of the console window has a node for each major area of NetBackup administration (including nodes for optional VERITAS software products).

2. Click the **Media and Device Management** node. This node contains the Media Manager utilities.

   The right pane initially contains the key NetBackup wizards that apply to this node. The following figure shows these Media Manager wizards. These wizards have the following links:

   - **Configure Storage Devices**
   - **Configure Volumes**

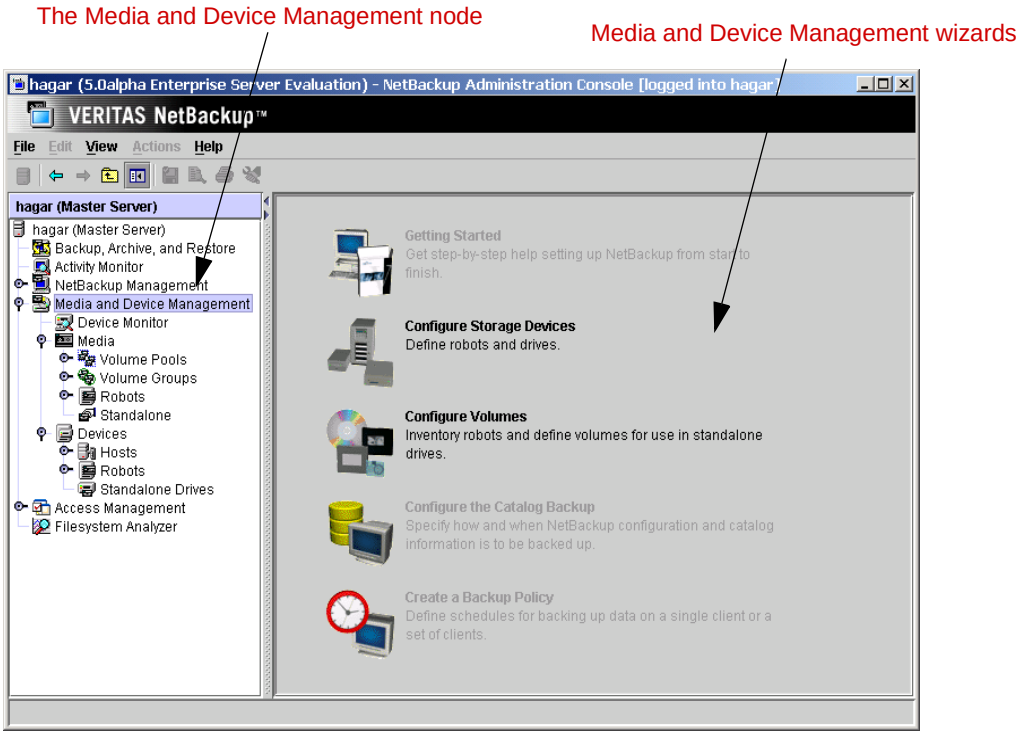

3. Expand **Media and Device Management** to view the additional Media Manager nodes. Clicking a node displays information related to that node in the right pane. The menus and buttons contain commands relevant to each selected node.

Note See the NetBackup system administrator's guide for UNIX for details on the other NetBackup Administration Console nodes, other NetBackup administration utilities, and menu commands available.

- Click **Device Monitor**. The device monitor has commands for monitoring the operation of storage devices.

  "Monitoring Storage Devices" on page 223 explains how to use the Device Monitor.

- Click **Media**. This node has commands for managing media.

  "Managing Media" on page 101 and "Managing Media in Robots" on page 165 explain how to manage your media.

- Click **Devices**. This node has commands for configuring and managing hosts, robots, drives, and shared drives.

"Configuring Storage Devices" on page 17 explains how to configure devices for Media Manager use.

Shortcut Menus

Pressing the right mouse button while the pointer is over sections of the NetBackup Administration Console displays shortcut menus. Different menus appear depending on where your pointer is positioned.

Menu-Based Administrative Interfaces

Media Manager has the utilities shown in the following table that you can use from terminals that do not support Java capabilities. These utilities have character-based interfaces that let you choose operations from menus and prompt you for necessary information.

Utility	Description
tpconfig	Used for device configuration. See "Using tpconfig" on page 401 for more information.
vmadm	Used for media configuration. See "Using the Media Management Utility (vmadm)" on page 413 for more information.

Command Line Administrative Interfaces (CLI)

Media Manager also has many administrative commands that can be used from the UNIX command line that you can use from terminals that do not support Java capabilities.

The two commands shown in the following table are for users and administrators that are not using NetBackup or Storage Migrator. For more information about these commands see "Tape I/O Commands" on page 263 and the NetBackup commands for UNIX reference guide.

Command	Description
tpreq	Used to request and mount volumes.
tpunmount	Used to unmount volumes.

For information about other Media Manager commands that are available (for example, `tpclean`, `vmadd`, and `vmupdate`), see the NetBackup commands for UNIX reference guide.

The Device Configuration Wizard

You can use the Device Configuration wizard to configure robots, non-shared drives, and shared drives. *Shared drives are a NetBackup Enterprise Server option.*

This wizard is available from the right pane of the NetBackup Administration Console (click **Configure Storage Devices**).

The Volume Configuration Wizard

You can use the Volume Configuration wizard to configure media (volumes). This wizard configures volumes for all supported standalone drives and robotic libraries.

This wizard is available from the right pane of the NetBackup Administration Console (click **Configure Volumes**).

The Shared Drive Wizard

This is a NetBackup Enterprise Server topic.

You can also use the Shared Drive wizard to configure shared drives (drives in an SSO configuration).

This wizard is available from the menus of the NetBackup Administration Console (click **Media and Device Management** > **Devices** > **Actions** > **New** > **Shared Drive**).

Device and Media Configuration Overview

The following items summarize the steps for configuring storage devices and media. Complete your NetBackup policy and storage unit configuration as explained in the NetBackup system administrator's guide for UNIX.

▼ To configure devices and media

1. Physically attach the storage devices to the Media Manager server and perform any configuration steps specified by the device or operating system vendor. Also, see the NetBackup Media Manager device configuration guide.

2. Create the system device files for the drives and robotic control.

This is usually done during installation. Device files are created automatically on some UNIX servers. Explicit configuration of device files is required on some UNIX servers to make full use of NetBackup features. See the NetBackup Media Manager device configuration guide for information.

3. Use the Device Configuration wizard to configure robots and non-shared drives. For more information, see "The Device Configuration Wizard" on page 45.

   To manually configure devices not supported by this wizard, you must use the menus of the **Devices** node. See "Configuring Storage Devices" on page 17.

4. *This step applies only to NetBackup Enterprise Server.*

   To configure shared drives (SSO), you can use the Device Configuration wizard or the the Shared Drive wizard. For more information, see "Adding Shared Drives" on page 59 and "Shared Storage Option (SSO) Topics" on page 269.

5. Use the Volume Configuration wizard to define the media that you will be using in your storage devices. This wizard configures volumes for all supported standalone drives and robots.

   When you logically add a new volume (or move volumes) in a robot that supports barcodes, a scan of the robot occurs and the Media Manager volume database is updated to reflect the contents of the robotic library.

   To manually configure volumes for devices, use the menus of the **Media** node. See "Managing Media" on page 101 and "Managing Media in Robots" on page 165 for advanced robot inventory options.

Using Media Manager

When configuration is complete, you enable device management by starting the Media Manager device daemon (`ltid`). This starts the following daemons:

- Media Manager device daemon (`ltid`). This daemon allows Media Manager to mount volumes on the tape or optical storage devices in response to user requests.
- Media Manager volume daemon (`vmd`). This daemon allows Media Manager to track the location of on-line and off-line volumes and remotely manage devices.
- Automatic volume recognition daemon (`avrd`). If a tape or optical volume is labeled and mounted in a drive, `avrd` automatically reads the label. If the label matches information contained in a pending request, Media Manager assigns the drive to that request.
- Robotic daemons. If you defined any robots in your configuration, `ltid` starts the corresponding robotic daemons.

Once these daemons are started, applications and users can request back ups and restores.

Requesting Volumes

NetBackup and Storage Migrator requests specify the volume's media ID and device density. A request must have a file name to use as a link to the device that is assigned and the external media ID should correspond to the Media Manager media ID. When Media Manager receives a request for a volume, it searches its volume database(s) for the media ID.

If the volume is in a robot, the volume database information includes the specific robot that has the volume and the location of the volume within the robot (if applicable). Media Manager then issues a mount command to the robotic daemon controlling the robot and the volume is mounted. Control is returned to NetBackup or Storage Migrator and the media read or write operation proceeds.

Note For standalone drives, NetBackup attempts to use the media in the drive, if the media meets the selection criteria in the request. For more information, see the topic on standalone drive extensions in the NetBackup system administrator's guide for UNIX.

Checking Barcodes

Media Manager checks barcodes to ensure that the robot loads the correct tape, in the event that the volume database is incorrect. If the barcode on the tape does not match the barcode in the mount request, Media Manager logs an error and stops the operation. In the case of a backup or restore, NetBackup also logs an error.

If a requested volume is not in a robot, a pending request message appears in the Device Monitor. The operator must then find the volume and do one of the following:

- Check the Device Monitor to find a suitable drive, and mount the requested volume in that drive.
- Move the volume into the robot and update the volume configuration to reflect the correct location for the media, and resubmit the request.

If the volume is labeled (tape or optical platter), the automatic volume recognition daemon reads the label and the drive is assigned to the request. If the volume is unlabeled and not associated with a robot, the operator manually assigns the drive to the request.

Volume Pools

Media Manager also uses a concept called volume pools. A volume pool is a set of media that can be used only by the users that you designate when you configure the pool. You specify volume pools and assign media to them when you configure Media Manager. The Media Manager device daemon validates access to volume pools.

Whenever a new volume is required for a robotic or standalone drive, Media Manager allocates it from the volume pool requested by the application. If there are no volumes available in the requested volume pool and a scratch pool has been configured, Media Manager allocates a volume from the scratch pool.

A pool named NetBackup is created by default and, unless you specify otherwise in the policy or schedule, all NetBackup backup images go to media in the NetBackup pool. You can create other volume pools as desired. Two other volume pools that are created by default are named None and DataStore.

See "Volume Pools and Volume Groups" on page 337 for more information.

Security Issues

See the topic, "Media Manager Security" on page 369 for important information about security.

Media Manager security topics include the following:

- The relationship with NetBackup authentication / authorization security.
- Controlling user access to `vmd` (the Media Manager volume daemon).
- Controlling user access to Media Manager robotic daemons and services.

Configuring Storage Devices 2

The device management window allows you to add, configure, and manage the devices that Media Manager uses.

This chapter explains how to attach drives and robotic libraries and configure Media Manager to use them. The topics in this chapter are listed below. If this is the first time you have configured devices, read the topics in the order they are presented in this chapter.

- "Starting Device Management" on page 18
- "Using the Device Management Window" on page 18
- "Performing Initial Device Configuration" on page 34
- "Managing the Device Manager Service (Windows) or the Device Daemon (UNIX)" on page 35
- "The Device Mapping File" on page 36
- "NetBackup Mixed Server Configurations" on page 36
- "Administering Devices on Other Servers" on page 37
- "The Global Device Database Host" on page 42
- "The Device Configuration Wizard" on page 45
- "Adding Robots" on page 47
- "Adding Drives" on page 61
- "Managing Your Device Configuration" on page 69
- "Printing Your Device Configuration" on page 80
- "Robot and Drive Configuration Examples" on page 81

The following topics apply only to NetBackup Enterprise Server.

- "Administering Devices on Other Servers" on page 37
- "Adding Shared Drives" on page 59

Starting Device Management

In the NetBackup Administration Console, click **Media and Device Management** > **Devices**. The device management window similar to the following appears:

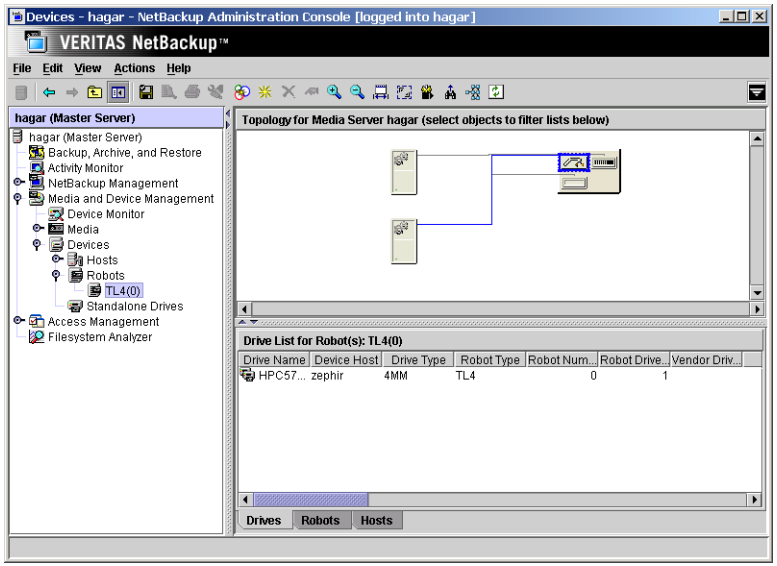

In addition to the tree pane on the left, the following two panes are displayed on the right when you start device management:

- A pane showing global topology.
- A pane showing devices.

A third pane for task messages is displayed when needed.

Using the Device Management Window

The following topics provide an overview of the window's contents:

- "Menus and Commands" on page 19
- "Toolbars" on page 21
- "Tree Pane" on page 22
- "Global Topology Pane" on page 22
- "Devices Pane" on page 25
- "Messages Pane" on page 31

- "Shortcut Menus and Commands" on page 31
- "Customizing the Window" on page 32
- "Allowable Media Manager Characters" on page 34

Menus and Commands

The device management window has available the menus and commands shown in the following table. Review the Note column for any restrictions.

The items on the menus are enabled based on the objects that are currently selected in the tree pane or topology pane, or which tab is selected in the devices pane. For example, if the robot tab is selected in the devices pane and a robotic library is selected in the list, **Inventory Robot** is enabled on the **Actions** menu.

Device Management Menus and Commands

Menu	Commands	Note
File	**Change Server** - Displays a dialog that allows you to change to a different server that is running NetBackup. See "Administering Devices on Other Servers" on page 37 for details. **New Window from Here** - Starts another instance of the NetBackup Administration Console node that was active. **Adjust Application Time Zone** - Displays a dialog that allows you to manage the timezone. NetBackup Console can execute in a different timezone than the timezone of the server on which it was initiated. See the NetBackup system administrator's guide for UNIX for more information. **Export** - Saves configuration information or data about the selected device monitor to a file. **Page Setup** - Displays a setup dialog for printing. **Print Preview** - Previews the print image. **Print** - Prints the topology pane or devices pane (when one of these panes is selected). **Close Window** - Closes the current window. **Exit** - Closes all open windows.	

Device Management Menus and Commands (continued)

Menu	Commands	Note
Edit	**New** - Displays a dialog to add an item of the type that is currently selected. **Change** - Displays a dialog for changing the configuration of the selected items. **Delete** - Deletes selected items from the configuration. **Find** - Command for finding items in the display lists.	
View	Contains commands for specifying your viewing preferences for the device management window, including showing and hiding the toolbar or tree, showing and hiding robots, sorting, filtering, column layout, using the topology window, and refreshing the display. See "Customizing the Window" on page 32.	
Actions	**New** - Displays choices for adding robots or drives to a configuration.	
	You can also add shared drives to a configuration.	Applies only to NetBackup Enterprise Server.
	Global Device Database - Displays a sub-menu that allows you to synchronize the entries in the global device database with the device configuration database. Synchronizing databases is normally not necessary, but can be done if you are experiencing problems and have made recent configuration changes that may not have been recognized.	
	Also displays choices for adding or removing device hosts from the global device database. See "The Global Device Database Host" on page 42.	Applies only to NetBackup Enterprise Server.
	Change Standalone Volume Database Host - Displays a dialog to change the volume database host for standalone drives.	Applies only to NetBackup Enterprise Server.
	Inventory Robot - Displays a dialog with choices for performing an inventory of the selected robot or updating the volume configuration to match the contents of the robot.	

Device Management Menus and Commands (continued)

Menu	Commands	Note
	Configure Shared Drive - Starts a wizard that guides you through the steps involved in adding a shared drive, changing a shared drive, or changing a non-shared drive to a shared drive (SSO option). Using this wizard is not the preferred method for adding shared drives. See "Adding Shared Drives" on page 59 first, if you are configuring shared drives.	Applies only to NetBackup Enterprise Server.
	Analyze Device Configuration - Starts the configuration analyzer. This wizard verifies that the settings in your device configuration are consistent and checks for potential problems. See "Using The Device Configuration Analyzer" on page 75.	
	Drive Cleaning - Displays a sub-menu with choices for performing drive cleaning functions.	
	Diagnose - Displays a dialog with choices for running diagnostic tests on a drive.	
	Stop/Restart Media Manager Device Daemon - Controls the Media Manager device daemon.	
	View SANPoint Control - Launches VERITAS SANPoint Control™. This web-based application helps you locate the cause of problems on your SAN or direct fibre-channel attached storage. See "Using SANPoint Control to Investigate SAN Problems" on page 79.	
Help	**Help Topics** - Provides online help information for the NetBackup Console.	
	Troubleshooter - Helps you to debug errors.	
	License Keys - Provides information about your active and registered license keys.	
	About NetBackup Administration Console - Displays program information, version number, and copyright information.	
	Current NBAC User - Provides NetBackup Access Control information for the current user. Gives the permissions for the user that you are currently logged in as.	

Toolbars

The toolbar buttons of the device management window provide shortcuts for commands that are on the menus. Also see "Customizing the Window" on page 32.

▼ To show or hide the toolbar buttons

1. In the NetBackup Administration Console, click **Media and Device Management** > **Devices**.

2. Click **View** > **Show Toolbar**.

Tree Pane

The tree pane for **Devices** contains nodes for **Hosts**, **Robots**, and **Standalone Drives**. You can select items in the tree pane or the Topology pane in conjunction with the tabs of the Devices pane to filter the lists that are shown in the Devices pane.

The following figure shows just the tree pane and contains an expanded view of the **Devices** node:

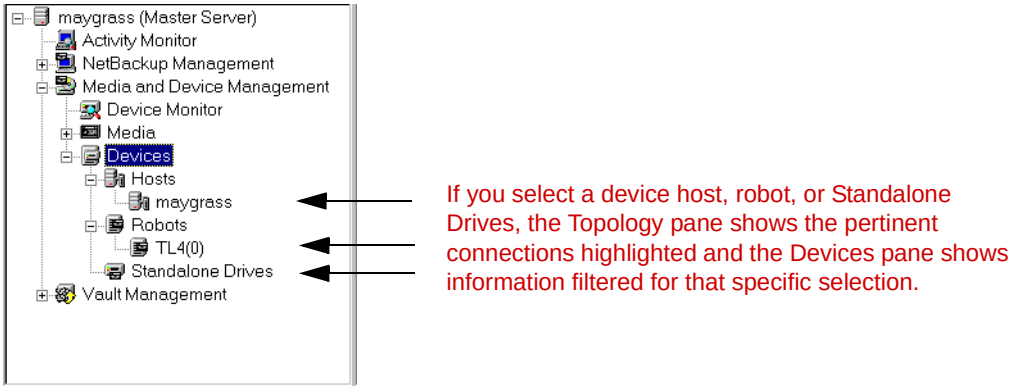

Note Selecting an item in the Tree pane (for example, a specific robot) *does not* enable the **Robots** tab in the Devices pane.

The following point applies only to NetBackup Enterprise Server.

You can view or configure devices on another master or media server. See "Administering Devices on Other Servers" on page 37 for more information.

Global Topology Pane

A description bar is displayed at the top of the topology pane.

Your view and use of the topology pane can be customized. See "Changing the View of the Topology Pane" on page 33. These commands are also available using the right mouse button in the topology pane.

The topology view shows how devices are configured to the server being administrated, by showing images of servers and devices. The topology information is taken from the Media Manager global device database and is displayed in this pane.

See the following related topics:

- "Topology Icons"
- "Topology Connections"
- "Selecting Topology Objects"

Topology Icons

The following are some of the images that can appear in the topology pane.

Description	Topology Image
NetBackup media server (or SAN media server)	
Robot	
Robot that is partially configured	
Volume database (robot media)	
Drive	
Drive that is partially configured	

Drive that is shared (*NetBackup Enterprise Server*)

Topology Connections

Connections in the topology indicate physical and logical connections of the devices, as follows:

- Media server (or SAN media server) to robotic library and drive relationships are indicated. A line attaches a robot arm to the media server that has robot control.
- Drives that are physically located in a robotic library are shown directly below the robotic library. Standalone drives are represented as individual drive objects.
- A line attaches a drive to the servers that are configured to use it. Robot to server connections and robot to volume database connections are always shown.
- Media is represented as in a robotic library. A line attaches the media to the server doing media management.
- The topology also indicates robotic library to volume database host connections.

Selecting Topology Objects

Selecting objects in the topology pane is also one of the methods to filter the contents of the lists shown in the Devices pane.

Multiple objects of the same type can be selected by pressing the Ctrl key and selecting another object. If the Ctrl key is used and an object of a different type is selected, the selection is allowed and the other objects will not be selected. If the Ctrl key is not used and an object is selected, the previous selection will be unselected.

Selecting an object will highlight the connecting lines from the object to all other objects to which it is connected, as follows:

- Clicking on a drive will highlight the connection to the server where it is attached.
- Clicking on a server will highlight connections to all robots, media, and drives that are connected or configured to the server.

The following point applies to NetBackup Enterprise Server.

- Clicking on a shared drive will highlight connections to all servers that are configured to use the drive.

Devices Pane

The lower right pane contains tabs for **Drives**, **Robots**, and **Hosts**. These tabs allow you to select different views of your configuration. Information in the devices pane is taken from the Media Manager global device database and the local device databases.

You can use the tree pane or the topology pane in conjunction with the tabs to filter the lists shown in this pane. Selecting an item in the tree (for example, a specific robot) *does not* enable the **Robots** tab in the devices pane.

See the following topics:

- "Managing the Devices Pane" on page 25
- "Using the Drives Tab" on page 25
- "Using the Robots Tab" on page 29
- "Using the Hosts Tab" on page 30

Managing the Devices Pane

The **Edit** and **View** menus have commands for finding or showing items. These commands are useful if you are managing many devices. Some of the columns are initially hidden by default.

▼ To rearrange or hide columns

❖ Click **View** > **Column Layout**

Using the Drives Tab

The drives list allows you to view detailed information about drives configured with NetBackup.

To update the drives list with more detailed information, a drive must be selected in the topology pane. You can select a drive in the topology explicitly or implicitly by selecting a robotic library. The drives list will then be updated with the objects that are selected in the topology.

The following table describes the columns in the drives list. Check the Note column for any restrictions.

Drives List

Column	Description	Note
Drive Name	Contains the configured name of the drive.	

Drives List (continued)

Column	Description	Note
	If the drive is configured as a shared drive (SSO), the icon for the drive appears as a shared item. If the icon shown for a drive contains a red arrow, the current server is *not* the volume database host for the drive. In this case, it is recommended to change to the correct server before adding volumes for this drive.	Applies only to NetBackup Enterprise Server.
Device Host	Contains the name of the device host (media server) where this drive is attached.	
Drive Type	Contains the type of drive. For example, 4MM. If the drive is partially configured, PCD is shown in this column. See "Managing Devices that are Partially-Configured" on page 46 for details.	
Robot Type	Specifies the type of robot that contains this drive. For example, TL4. NONE in this column means that the drive is a standalone drive. If the robot is partially configured, PCR is shown in this column. See "Managing Devices that are Partially-Configured" on page 46 for details.	
Robot Number	Contains the number of the robot. If the robot type is NONE, this column is blank.	
Robot Drive Number	Specifies the number of the drive in the robot.	
	For ACS, TLH, and TLM robot types, the robot drive number is not displayed.	Applies only to NetBackup Enterprise Server.
Vendor Drive Identifier	For TLM robots, this column contains the DAS/SDLC drive name. For TLH robots, this column contains the IBM device number.	Applies only to NetBackup Enterprise Server.
ACS	Contains the ACS library software index that identifies the robot where this drive is located.	Applies only to NetBackup Enterprise Server.

Drives List (continued)

Column	Description	Note
LSM	Contains the ACS Library Storage Module where this drive is located.	Applies only to NetBackup Enterprise Server.
Panel	Contains the ACS robot panel where this drive is located.	Applies only to NetBackup Enterprise Server.
Drive	Contains the ACS library software physical number of the drive.	Applies only to NetBackup Enterprise Server.
Drive Path	Contains the path for the drive. For example, /dev/rmt/2cbn.	
Serial Number	Contains the drive serial number, if the drive reports a serial number.	
World Wide ID	Contains a unique identifier that is assigned to each device. Some drives may not report this identifier.	
Shared	Yes, means this drive is configured as a shared drive. No, means the drive is not a shared drive.	Applies only to shared drives (SSO) on NetBackup Enterprise Server.
Drive Status	Contains the current status of the drive. Status can be UP or DOWN.	
Port	This column contains the SCSI port number of the drive.	Applies only to NetBackup Windows servers.
Bus	This column contains the SCSI bus number of the drive.	Applies only to NetBackup Windows servers.
Target	This column contains the SCSI target number (or SCSI ID) of the drive.	Applies only to NetBackup Windows servers.

Drives List (continued)

Column	Description	Note
Lun	This column contains the SCSI logical unit number of the drive.	Applies only to NetBackup Windows servers.
Last Mount	Contains the last time a volume was mounted in the drive.	
Mount Time	Contains the total accumulated mount time (in hours).	
Cleaning Frequency	Contains the cleaning frequency for the drive (in hours).	
	Contains a zero for shared drives or robots that do not support frequency-based cleaning.	Applies only to NetBackup Enterprise Server.
Last Cleaning Time	Contains the date that the drive was last cleaned.	
Cleaning Comment	Contains the message, NEEDS CLEANING, if a cleaning frequency was defined for the drive and the value for Mount Time is greater than the frequency; or the TapeAlert CLEAN_NOW flag is set.	
TapeAlert Enabled	Contains Yes, if TapeAlert is enabled.	
Volume Header	This column specifies the volume header device path for the drive.	Applies only to optical disk drives on some NetBackup UNIX servers.
Drive Comments	Contains any user comments added for the drive.	
Inquiry Information	Contains device information returned from the device. This information is used to identify the device. For example, vendor ID, product ID, and product revision.	
NDMP Host	Contains the name of the NDMP control host.	
Drive Index	Drive index assigned to the drive during configuration.	

Using the Robots Tab

The robots list allows you to view detailed information about robots configured with NetBackup. Initially, all robots in the global device database are listed in the robot list. However, only information found in the global device database will be displayed in the list.

To update the robot list with more detailed information, a robot must be selected in the topology pane or in the tree pane. You can select a robot in the topology explicitly or implicitly by selecting a drive in the robot or the media server that the robot is connected to. The list will then be updated with the objects that are selected in the topology.

The following table describes the columns in the robots list. Check the Note column for any restrictions.

Robots List

Column	Description	Note
Robot Name	Contains the type and number of the robot, for example TLD(3). If the robot is partially configured, PCR is shown in this column. For example, PCR(3). See "Managing Devices that are Partially-Configured" on page 46 for details.	
	If the icon shown for a robot contains a red arrow, the current server is *not* the volume database host for the robot. In this case, it is recommended to change to the correct server before adding volumes for this device.	Applies only to NetBackup Enterprise Server.
Device Host	Contains the name of the device host where this robot is attached.	
Robot Type	Contains the type of robot. See "Media Manager Robot Types" on page 302 for a list of supported robot types. If the robot is partially-configured, PCR is shown in this column.	
Robot Number	Number of the robot.	
Volume Database Host	Contains the name of the volume database host that is used to track the volumes in this robot	
Serial Number	Contains the robot serial number, if the robot reports this information.	

Robots List (continued)

Column	Description	Note
Robotic Path	Contains the path for the robot if one exists. For example, /dev/sg/c2t5l0.	
Robot Control Host	Contains the name of the host that is providing the robotic control.	Applies only to NetBackup Enterprise Server.
Port	This column contains the SCSI port number of the robot.	Applies only to NetBackup Windows servers.
Bus	This column contains the SCSI bus number of the robot.	Applies only to NetBackup Windows servers.
Target	This column contains the SCSI target number (or SCSI ID) of the robot.	Applies only to NetBackup Windows servers.
Lun	This column contains the SCSI logical unit number of the robot.	Applies only to NetBackup Windows servers.
Inquiry Information	Contains device information returned from the device that is used to identify the device. For example, vendor ID, product ID, and product revision.	

Using the Hosts Tab

The hosts list allows you to view detailed information about the servers that are referenced in your Media Manager configuration.

To update the hosts list with more detailed information, a host must be selected in the topology pane or in the tree pane. You can select a host in the topology explicitly or implicitly by selecting a robot. The hosts list will then be updated with the objects that are selected in the topology.

The following table describes the columns in the hosts list:

Hosts List

Column	Description
Host Name	Contains the name of the device host.
Connection Status	Contains the current NetBackup connection status for this server. This status field can contain Connected, Not Connected, or the text of a connection error message.
Standalone Volume Database Host	Contains the name of the volume database host for all of the standalone drives controlled by this device host.
Version	Contains the NetBackup software version.

Messages Pane

The **Messages** pane appears in the lower right below the Devices pane, and is used to display messages about a task that is running as a background process. This pane is displayed only if there is an informative message or error message for the task. If the task completes normally, the pane is not displayed.

▼ To manage the messages pane

❖ Click one of the icons in the title bar of the pane to minimize, maximize, or close the pane.

Shortcut Menus and Commands

Shortcut menus work in the context of what device is currently selected in the tree pane or topology pane, or which tab is selected in the devices pane. Shortcut commands are also available on the menus or toolbars.

▼ To display a shortcut menu

❖ Click the right mouse button while the pointer is over a pane or a selection of a pane.

Short Cut Menu

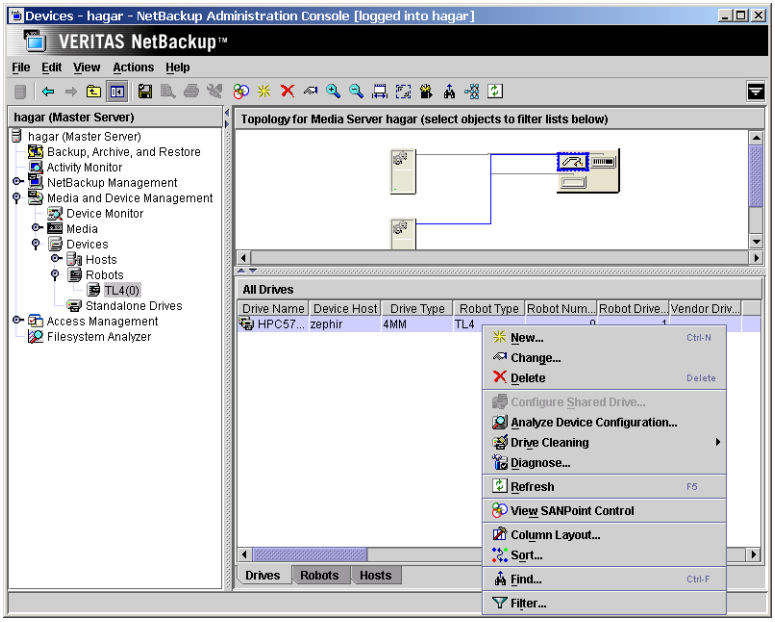

Customizing the Window

The **View** menu has options for sorting, filtering, and changing the layout and appearance of the panes.

See the following topics:

- "Viewing and Rearranging Columns" on page 32
- "Changing the View of the Topology Pane" on page 33

See the NetBackup administrator's guide for UNIX or the NetBackup administrator's guide for Windows for more details.

Viewing and Rearranging Columns

▼ **To show or hide columns, or rearrange the order of columns**

❖ Click **View** > **Column Layout**.

Changing the View of the Topology Pane

These commands are also available using the right mouse button in the topology pane.

▼ To fit the topology diagram to the pane

This procedure will fit the diagram to the pane, and not use the default size on start up.

1. Click **View** > **Options** > **Devices**.
2. Select **Fit topology to window on startup**.

▼ To enlarge the topology diagrams

This command can be done multiple times.

❖ Click **View** > **Zoom** > **Zoom In**.

▼ To decrease the size of the topology diagrams

This command can be done multiple times.

❖ Click **View** > **Zoom** > **Zoom Out**.

▼ To size the topology diagram to the size of the current pane

❖ Click **View** > **Zoom** > **Fit to Window**.

▼ To select objects and focus on a portion of the topology diagram

1. Click **View** > **Zoom** > **Overview Window**.

   A copy of the topology diagram appears in a secondary window.

2. Use the mouse to move the selection tool (a rectangle) to select desired objects in the configuration. The selected objects will be the focus of the main topology pane.

▼ To show only the connection for a selected device

Use this option to show the connection for a selected device, rather than showing all connections in the topology.

❖ Click **View** > **HighLighted Connections Only**.

▼ To show all of the connections in the topology

❖ Click **View** > **HighLighted Connections Only** again.

Allowable Media Manager Characters

The following set of characters can be used in user-defined names, such as drive comments, host names, and drive names that you enter when creating these Media Manager entities. These characters must be used even when specifying these items in foreign languages.

Do not use a minus as the first character. Spaces are only allowed in a comment for a drive.

- Alphabetic (A-Z and a-z)
- Numeric (0-9)
- Period (.)
- Plus (+)
- Minus (-)
- Underscore (_)

Performing Initial Device Configuration

For NetBackup to recognize and communicate with the connected devices, and for device discovery to discover devices, NetBackup issues SCSI pass-thru commands to the devices in a configuration.

The server platforms supported by NetBackup may require special operating system configuration changes. This may include changes needed for device discovery and other configuration requirements for devices to be recognized.

See the appropriate chapter of the NetBackup Media Manager device configuration guide for your particular server platform.

When performing initial device configuration, a prompt at the end of the procedure asks if you want to stop and restart `ltid`. This action also stops and restarts any robotic processes. See "Managing the Device Manager Service (Windows) or the Device Daemon (UNIX)" on page 35 for information on manually controlling `ltid`.

▼ To attach devices to a UNIX master or media server

The following steps describe a general method for attaching devices to a UNIX media server.

1. Physically attach the storage devices to the server and perform any required configuration steps specified by the device or operating system vendor.

2. Create any required system device files for the drives and robotic control. This is usually done during installation of the operating system.

   Device files are created automatically on some UNIX platforms. Explicit configuration of device files is required on some UNIX servers to make full use of NetBackup features.

3. Configure the storage devices using Media Manager. Depending on the type of device you are installing, proceed to the following topics:

   - "The Device Configuration Wizard" on page 45.
   - "Adding Robots" on page 47.
   - "Adding Drives" on page 61.

   The following points apply only to NetBackup Enterprise Server.

   - If you are adding the device to a remote host, see "Administering Devices on Other Servers" on page 37.
   - "Adding Shared Drives" on page 59.

Managing the Device Manager Service (Windows) or the Device Daemon (UNIX)

Stopping and restarting `ltid` also stops and restarts any robotic processes. `ltid` is the Media Manager device daemon on UNIX servers and the NetBackup Device Manager service on Windows servers.

Caution Stopping and restarting ltid may abort any backups, archives, or restores that are in progress.

▼ To manage this daemon

1. In the NetBackup Administration Console, click **Media and Device Management** > **Device Monitor**.

2. Click **Actions** > **Stop/Restart Media Manager Device Daemon**.

3. *The following step applies only to NetBackup Enterprise Server.*

   Select a device host. The dialog also shows the current status of this daemon.

If the device host is known to NetBackup to be a Backup Exec server, the server does not appear in the list.

4. The dialog allows you to start, stop, or stop / restart the service. Select the action you want to perform.

5. Click **OK** or **Apply**.

   You may find it useful to select **Stop** and click **Apply**, and then select **Start** and click **Apply**.

   The following point applies only to NetBackup Enterprise Server.

   By using **Apply**, you can select device hosts and actions for more than one device host before clicking **OK** to close the dialog.

The Device Mapping File

This mapping file is used by the Device Configuration wizard to discover and configure new robots and drives. This file is also used by NetBackup processes to communicate with various vendor devices.

In some cases, device discovery support for new or upgraded devices may be accomplished without waiting for a patch from VERITAS. Support for some new devices only requires that you download an updated device mapping file when any device changes are made to your configuration.

Note The contents of this file does not indicate support for any of the devices, only the ability to recognize and automatically configure them.

▼ To obtain the current device mapping file

1. Visit the VERITAS support web site (`http://www.support.veritas.com`) to download the latest device mapping file for your devices.

2. Refer to the supplied README file for instructions. The files that you download are named similar to the following files: Mappings_5_*nnnnnn*.TAR and Mappings_5_*nnnnnn*.ZIP.

NetBackup Mixed Server Configurations

This is a NetBackup Enterprise Server topic.

Mixed levels of NetBackup servers are supported. This enables NetBackup master and media servers to run a mixture of NetBackup major releases and patch releases in the same environment.

The basic rules for a NetBackup mixed server environment are as follows:

- The master server must be running the highest release level of NetBackup that is installed in the environment. All of the media servers in the environment must be running equal or lower levels of NetBackup.
- Starting with the NetBackup 5.0 release, a master server can inter-operate with a media server that is running a level of NetBackup that is one major release lower. (NetBackup 4.5 release levels cannot inter-operate with lower release levels.)

For example, a NetBackup master server running NetBackup 5.1 can inter-operate with media servers running NetBackup 4.5, 5.0, 4.5 MP2, 5.1, and 5.0 MP1.

Ensure that all of the servers in the environment have the appropriate and latest NetBackup patches installed.

If you are using SSO, be sure to review the "Volume Database Host (Device Allocation Host) Requirements" on page 275.

Administering Devices on Other Servers

This is a NetBackup Enterprise Server topic.

Initially, you can manage the storage devices that are configured on the server where you are running the NetBackup Media Manager interface. In the following figure, the administrator is running the NetBackup Administration Console on server shark and managing devices on host eel.

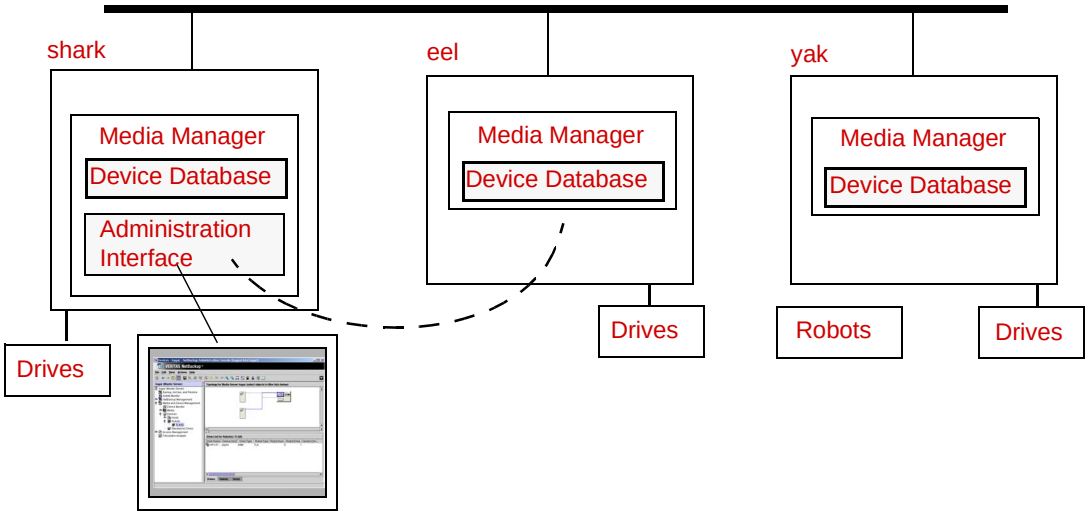

You can administer devices that are attached to other servers, if these servers are in the same hardware configuration and are using the same global device database host. Select the device or host that you want to administer in the tree pane of the NetBackup Administration Console.

You can also change from the current server to a different master or media server. If you change from a NetBackup Enterprise Server to a NetBackup Server, the functionality available on the new server is limited to the functionality supported by NetBackup Server.

You cannot change from a NetBackup Server to a NetBackup Enterprise Server.

Also see "Remote Administration of Other UNIX Servers" on page 39.

▼ To change to a different master or media server

1. In the NetBackup Administration Console, click the server name shown at the top of the tree.

2. Click **File** > **Change Server**.

3. In the dialog that appears, do *one* of the following to specify the server that you want to monitor.

   - Enter the name of the server.

- Select a server from the servers shown in the list.

You can also click **Remove** to delete a server from the list.

4. Click **OK**.

   The name of the new server appears, and the topology and devices panes show device information for the new server.

Remote Administration of Other UNIX Servers

In addition to using **File** > **Change Server** to administer devices on other servers, you can specify a different server when logging into NetBackup.

The name of the UNIX server that you specify in the Login box, when starting the NetBackup Administration Console, must be in the NetBackup `bp.conf` file on the remote UNIX server where you want to manage devices.

Administration Example

Refer to the previous figure. You could start the administration interface from the NetBackup UNIX server (named shark) and specify the UNIX server (named eel) in the Login box.

In this example, you

- Started the interface from the host named shark.
- Are managing NetBackup, through Java application server software running on the host named eel.
- Want to manage devices on a third host, named yak.

The `bp.conf` file on host yak must include the name of the server that you logged into (eel), *not* the host where you first started the administration interface (shark).

If you cannot connect to host yak, add host eel to the NetBackup `bp.conf` file on host yak.

Adding SERVER Entries in the NetBackup bp.conf File

Refer to the previous figure. Also see the NetBackup system administrator's guide for UNIX servers for more information.

▼ To add SERVER entries

1. Add a `SERVER = host` entry below any existing server entries in the `/usr/openv/netbackup/bp.conf` file.

2. Stop and restart the NetBackup database manager (`bpdbm`) and NetBackup request daemon (`bprd`).

3. The Media Manager volume daemon must be running on host yak or Media Manager will not be able to update its configuration. This daemon is normally started when you start the Media Manager device daemon.

   If you suspect that the volume daemon is not running, you should start `vmd` using `/usr/openv/volmgr/vmd`.

If you are unable to manage the devices, you may need to add a `SERVER` entry to the `vm.conf` file on host yak. See "Media Manager Security" on page 40.

Media Manager Security

For Media Manager to access media and device management functionality on another host, you may need to add a `SERVER` entry to the `vm.conf` file on the remote host.

`SERVER` entries are used for Media Manager security. If there are no `SERVER` entries and authentication is not enabled, *any* host can perform media and device management on the host. You can add entries allowing only specific hosts to remotely access those capabilities.

If the vm.conf File on a Remote Host Contains	Then
No SERVER entries and authentication is not enabled	Any host can perform media and device management on this host. It is not necessary to make any additions to vm.conf.
SERVER entries	You must add a SERVER entry for the host where you are running (the server you logged into) the NetBackup Administration Console (if an entry is not present).

vmd Considerations

`vmd` is the Media Manager volume daemon on UNIX servers and the NetBackup Volume Manager service on Windows servers. Device configuration changes, even those made local to a server, may require `vmd` to be running. It is recommended that `vmd` be running at all times, including when changes are being made to the Media Manager device configuration.

Media Manager authentication / authorization may affect systems where NetBackup authentication / authorization has been enabled.

Connections to vmd will fail if authentication / authorization are enabled, an AUTHORIZATION_REQUIRED entry is present in vm.conf, and the caller of vmd does not have the required permission to use vmd functions.

▼ **To enable authentication/authorization in NetBackup (but not in Media Manager)**

You can do either of the following:

❖ Add SERVER entries in vm.conf.

❖ Have no SERVER and no AUTHORIZATION_REQUIRED entries in vm.conf.

See "Media Manager Security" on page 369 for more information on the following topics:

- The relationship with NetBackup authentication / authorization security.
- Controlling user access to vmd (the Media Manager volume daemon).
- Controlling user access to Media Manager robotic daemons and services.

Example SERVER Entries

Assume that you have three hosts, named eel, yak, and shark; and that NetBackup authentication is not enabled.

You want to centralize device management on host shark and also permit each host to manage its own devices.

- The vm.conf file on shark contains the following:

  ```
  SERVER = shark
  ```

  The vm.conf file on shark does not require any additional SERVER entries, because all device management for shark will be performed from shark.

- The vm.conf file on eel contains the following:

  ```
  SERVER = eel
  SERVER = shark
  ```

  This allows eel to manage its own devices and also permits shark to access them.

- The vm.conf file on yak contains the following;

  ```
  SERVER = yak
  SERVER = shark
  ```

This allows yak to manage its own devices and also permits shark to access them.

The Global Device Database Host

The global device database is the repository for all Media Manager device configuration information. See the following topics for more information about this host:

- "A Single Host is Required" on page 42
- "How This Host is Determined" on page 42
- "Managing The Global Device Database Host" on page 43

A Single Host is Required

This is a NetBackup Enterprise Server topic.

Device discovery, auto-configuration, and manual configuration (for example, `tpconfig`) are all methods used by NetBackup and Media Manager to configure devices. For device configuration to work properly (particularly where devices are connected to many servers) a single host must serve as the repository for global device configuration information.

See "Media and Device Management Domain Management" on page 297 and "Frequently Asked Questions About Device Discovery" on page 318.

Note When using the Device Configuration wizard, a global device database host conflict may be detected during device scanning. This indicates that the hosts you selected to scan do not agree on which host to store the global device information.

Also, the **Devices** node of the NetBackup Administration Console requires that all hosts that the node references need to be using the same global device database host. The **Devices** node verifies global device database consistency between any hosts that are included for device management.

The `tpautoconf` command has options to preview and merge existing global databases. See the NetBackup commands guide for details.

How This Host is Determined

This is a NetBackup Enterprise Server topic.

When you install NetBackup, the default option is to have the master server configured to be the global device database host. If your environment contains multiple master servers, you can designate a different server to be your global device database host during the installation.

If you have multiple master servers in your configuration or did not install or upgrade your master servers before the media servers, then more than one host may have been designated as the global device database host. Refer to synchronizing the database in "Managing The Global Device Database Host" on page 43 to correct this problem.

You should manage your media servers from the master server point of view.

Managing The Global Device Database Host

The following topics explain the commands that are used to manage the global device database host.

▼ To add a device host to the database

This is a NetBackup Enterprise Server topic.

Unless you add a drive or add a robotic library, entries for each device host are not entered in the database (no host entries are present in the database).

1. In the NetBackup Administration Console, click **Media and Device Management** > **Devices**.
2. Select **Actions** > **Global Device Database** > **Add Device Host**.
3. Enter a device host name or click **Browse** to find a host.

▼ To remove a device host from the database

This is a NetBackup Enterprise Server topic.

1. In the NetBackup Administration Console, click **Media and Device Management** > **Devices**.
2. Select **Actions** > **Global Device Database** > **Remove Device Host**.

▼ To synchronize the database

This procedure updates host settings in the global device database to be consistent with the device configurations of all of the device hosts in your configuration.

Synchronizing the global device database is normally not necessary, but can be done if you are experiencing problems and have made recent configuration changes to your local device hosts that may not have been recognized.

1. In the NetBackup Administration Console, click **Media and Device Management** > **Devices**.

2. Select **Actions** > **Global Device Database** > **Synchronize Global Device Database**.

▼ **To specify a different host as the global device database host**

This is a NetBackup Enterprise Server topic.

❖ Use the `tpautoconf` command.to determine the current global device database host and to specify a different host as the global device database host.

See the NetBackup commands for UNIX or NetBackup commands for Windows reference guide for information about using the `get_gdbhost` and `set_gdbhost` options of the `tpautoconf` command.

`tpautoconf` is also used by the Device Configuration wizard to automatically discover and configure devices.

Why You Should Use the Media Manager Wizards

NetBackup provides two wizards for configuring devices (the Device Configuration wizard and the Shared Drive wizard), a wizard for configuring volumes, and also a device configuration analyzer.

Using the wizards is recommended and is the easiest method for configuring devices and media. The wizards guide you through the configuration steps. In addition to making the configuration process faster, these wizards eliminate many common mistakes made when configuration is done using alternate methods.

The wizards are available from the Media and Device Management interface of the NetBackup Administration GUI. Some of the wizard screens differ slightly on the Windows and UNIX versions of NetBackup.

Caution Use these wizards with care in a production environment, since these wizards stop the Media Manager daemons/services. You should *not* be running production backups when using these wizards.

▼ To use the Media Manager wizards

1. From your server use one of the device configuration wizards to configure robots and drives.

   See "The Device Configuration Wizard" on page 45.

   The following point applies only to NetBackup Enterprise Server.

   If you are using the shared drive option, see "Adding Shared Drives" on page 59.

2. After configuring a subset of devices, use the configuration analyzer to point out any errors before configuring other devices.

   See "Using The Device Configuration Analyzer" on page 75.

3. Use the Volume Configuration wizard to configure media for robots and standalone drives.

   See "Using the Volume Configuration Wizard" on page 140.

The Device Configuration Wizard

Using the Device Configuration wizard is the recommended method of configuring most devices. You should use this wizard to configure the following types of devices:

- Robots
- Drives
- Robots and drives attached to NDMP hosts
- Shared drives (*for NetBackup Enterprise Server SSO configurations only*)

This wizard uses device discovery to auto-configure devices and add robotic libraries and drives to your Media Manager configuration. To perform these tasks, this wizard uses device serialization.

This wizard also uses the device mapping file when discovering and configuring devices. See "The Device Mapping File" on page 36.

In some cases, the wizard may leave some devices partially configured. See "Managing Devices that are Partially-Configured" on page 46 for more information.

For important background information on device discovery, device serialization, and the Device Configuration wizard, see "Frequently Asked Questions About Device Discovery" on page 318.

See the following related topics:

- "Operating System Changes" on page 46

- "Possible Global Device Database Host Conflict" on page 46
- "Configuring Devices not Supported by the Wizard" on page 46
- "Managing Devices that are Partially-Configured" on page 46
- "Learning More About the Device Configuration Wizard" on page 47
- "Starting the Device Configuration Wizard" on page 47

Operating System Changes

For device discovery to discover devices, NetBackup issues SCSI pass-thru commands to the devices in a configuration. The server platforms supported by NetBackup may require special operating system configuration changes. This may include changes needed for device discovery and other configuration requirements for devices to be recognized.

See the appropriate chapter of the NetBackup Media Manager device configuration guide for your particular server platform.

Possible Global Device Database Host Conflict

The following topic applies only to NetBackup Enterprise Server.

When using this wizard a global device database host conflict may be detected during device scanning. This conflict occurs when the hosts you selected to scan in the wizard do not agree on which host stores global device information. See "The Global Device Database Host" on page 42 for more information.

Configuring Devices not Supported by the Wizard

To configure devices that are not supported or fully-supported by the Device Configuration wizard, see the following topics:

- "Adding Robots" on page 47.
- "Using the Device Configuration Wizard to Configure Shared Drives" on page 59.
- "Adding Drives" on page 61.

Managing Devices that are Partially-Configured

Under certain conditions, for example in the case of an unsupported robotic library or drive, the Device Configuration wizard may leave some devices as partially configured. Also if you deselect a discovered device from the tree view in the wizard, the device will be configured as partially configured.

Partially-configured drives are shown as **PCD** and partially-configured robots as **PCR** in the Drives list of the Devices window pane. See "Using the Drives Tab" on page 25 and "Using the Robots Tab" on page 29.

If you have partially-configured drives, ensure that you have downloaded the most recent device mapping file from the VERITAS support web site (see "The Device Mapping File" on page 36).

Learning More About the Device Configuration Wizard

You can obtain detailed information about this wizard before you start using the wizard, including what to expect in the wizard, a wizard overview, and limitations of the wizard.

▼ **To learn about this wizard**

1. Start the wizard (see "Starting the Device Configuration Wizard" on page 47).
2. From the welcome screen of the wizard, click **Help**.
3. When finished reviewing the help information for the wizard, exit the help and click **Cancel** to exit the wizard.

Starting the Device Configuration Wizard

This wizard is available from the list of wizards displayed in the right pane of the **Media and Device Management** window of the NetBackup Administration Console or from the Getting Started wizard.

Be sure to review the limitations of this wizard before starting.

▼ **To start the device configuration wizard**

❖ In the NetBackup Administration Console, click **Media and Device Management** > **Configure Storage Devices**.

Adding Robots

Note Using the Device Configuration wizard is the recommended method of configuring robots. See "The Device Configuration Wizard" on page 45 for more information and wizard restrictions.

When adding a robotic library and drives, the best method is to add the robot first, as explained in the following procedure and then add the drives (see "Adding Drives" on page 61).

▼ To add a robot

1. Perform the steps explained in "Performing Initial Device Configuration" on page 34.

2. In the NetBackup Administration Console, click **Media and Device Management** > **Devices**.

3. Select **Actions** > **New** > **Robot**.

   A dialog for adding a robotic library appears. The properties that appear in this dialog vary depending on the server platform type and robot type.

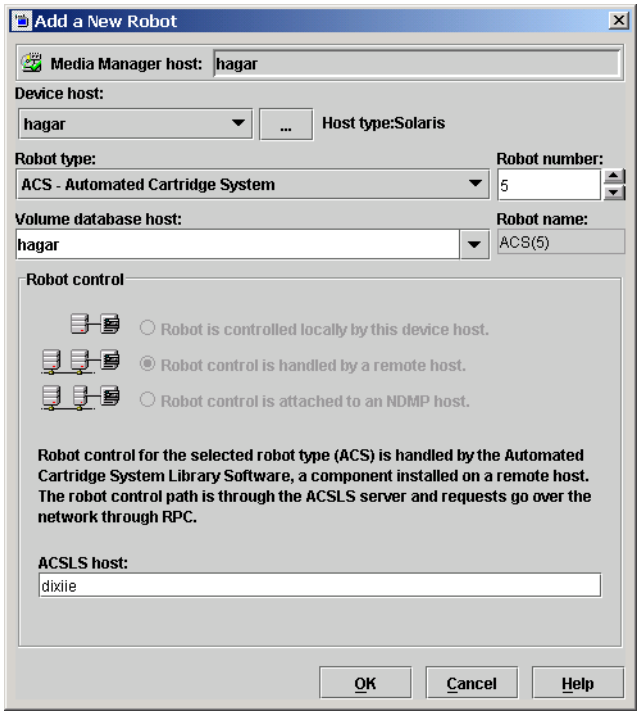

4. Specify the properties for the robotic library as explained in "Dialog Entries for Adding and Changing Robots" on page 49.

5. Click **OK**.

Dialog Entries for Adding and Changing Robots

The following topics describe the properties that you specify when you add a robotic library or change a robot configuration. Some of these properties apply only to specific types of robots, types of server platforms, or NetBackup server types.

- "Device Host" on page 49
- "Robot Type" on page 49
- "Robot Number" on page 50
- "Volume Database Host" on page 51
- "Robot Control Section of the Dialog" on page 51
- "Robot is controlled locally by this device host" on page 54
- "Robot control is handled by a remote host" on page 57
- "Robot control is attached to an NDMP host" on page 58

Device Host

Device Host applies only to NetBackup Enterprise Server.

Specifies the host to which you are adding the robotic library.

▼ To specify a device host

❖ Click the **arrow** and select a host from the list.

▼ To specify a device host that is not in the list

1. Click **...**
2. In the dialog that appears, enter the name of the host that you want.

Robot Type

Specifies the type of robot that you are adding.

▼ To specify a robot type

1. Visit the VERITAS support web site (`http://www.support.veritas.com`) to locate the robot type to use for specific vendors and models.

2. Click the **arrow** and select from the list of types that Media Manager supports. (Specify **RSM** if you are adding a RSM robot.)

▼ To specify an RSM robot type

❖ Review the following important points about using the Microsoft Windows Removable Storage Manager (RSM):

- Your device host must be running a Windows operating system that supports RSM.
- The Microsoft Removable Storage Manager will be in control of the robot rather than Media Manager.
- A robotic library configured as an RSM robot, cannot also be used as a Media Manager direct-controlled (SCSI) robot (for example, TLD).
- For more information on configuring and using RSM robots, see the RSM appendix of the NetBackup Media Manager system administrator's guide for Windows.
- *The following point applies only to NetBackup Enterprise Server.*

  Shared drives cannot be configured in an RSM robot, and RSM robots cannot be shared.

Robot Number

Specifies a unique, logical identification number for the robotic library. This number identifies the robotic library in displays (for example, TLD (21)) and is also used when adding media for the robot to the Media Manager configuration.

▼ To specify a robot number

❖ Click an **arrow** and select a robot number.

The following points apply only to NetBackup Enterprise Server.

- Robot numbers must be unique for all physically-distinct robots on all hosts in the configuration. This applies regardless of the robot type or the host that controls them. For example, if you have two robots, use different robot numbers even if they are controlled by and configured on different hosts.

- If you are adding a robot definition for a robot where the robot control is handled by a remote device host, be sure to use the same robot number as used for that robot on all other device hosts.
- If the robot has its robotic control and drives on different hosts (for example, as permitted by a Tape Library DLT robot), be certain to specify the same robot number in all references to that library. That is, use the same robot number on the hosts with the drives, as you do on the host that has the robotic control.

  See "Example 3: Configuring a Robot Distributed Among Multiple Servers" on page 88.

Volume Database Host

Volume Database Host applies only to NetBackup Enterprise Server.

Specifies the name of the host where Media Manager keeps the volume configuration information about the media in the robotic library. You can specify any host that has Media Manager installed as the volume database host, even if the host does not have any drives or robots attached.

VERITAS recommends that you use one volume database host for all your volumes (robotic and standalone). Although it is possible to maintain separate volume databases on multiple hosts, administration is more difficult.

See "Media and Device Management Domain Management" on page 297 for more information.

"Example 3: Configuring a Robot Distributed Among Multiple Servers" on page 88, shows a configuration where the volume database is on a central host.

You will have to know the name of the volume database host when adding volumes to the robotic library.

Adding volumes is explained in "Managing Media" on page 101.

▼ To specify the volume database host

❖ Click the **arrow** and select from the list of hosts.

Robot Control Section of the Dialog

In the Robot control section you specify the type of control for the robot. Depending on the robot type you are adding and the type of media server, various combinations of the robot control buttons are available in the dialog.

Be sure to read your NetBackup release notes or visit the VERITAS support web site for more detailed information on supported robot types, media server platforms, and other NetBackup server limitations.

See the following topics:

- "Robot is controlled locally by this device host" on page 54.
- "Robot control is handled by a remote host" on page 57.
- "Robot control is attached to an NDMP host" on page 58.

Also see "Robot Attributes" on page 305 for more information.

Robot Control Configuration Overview

The following table provides an overview of robot control configuration, based on robot type and the media server platform type. The third column in the table indicates the robot control button that is valid for that particular robot type and server platform:

Media Manager Robot Type	Supported Media Server Platform	Type of Robot Control	Information Required for Configuration
ACS	All	Remote	ACSLS host
LMF	Solaris	Local	Library name
LMF	Solaris	Remote	Robot control host
ODL	AIX, Solaris, HP-UX, and IRIX	Local	Robotic device file
RSM	Windows (needs RSM support)	Local	Robot device
TL4	UNIX (except Linux)	Local	Robotic device file
TL8, TS8, and TSD	UNIX	Local	Robotic device file
TLD	UNIX	Local	Robotic device file
TSH	AIX, Solaris, and IRIX	Local	Robotic device file
TL4, TL8, TLD, TS8, and TSD	Windows	Local	Robot device
TL8	All	Remote	Robot control host

Media Manager Robot Type	Supported Media Server Platform	Type of Robot Control	Information Required for Configuration
TLD	All	Remote	Robot control host
TL8, TLD, TSD, and TLH	Windows, AIX, Solaris, and HP-UX	NDMP	NDMP host name and Robot device
TLH	AIX	Local	LMCP device file
TLH	UNIX (except AIX and Linux) and Windows	Local	Library name
TLH	All (except Linux)	Remote	Robot control host
TLM	All (except Linux)	Remote	DAS/SDLC server

Library Sharing Example

The following example applies only to NetBackup Enterprise Server.

The following figure shows two servers using two drives in a TL8 robot. This is an example of library sharing. The robotic control for the robot is on the host named eel. One drive in the robot is connected to eel and the other is connected to the host shark.

When you add this robot to the device configuration on eel, you select **Robot is controlled locally by this device host**. When you add the robot to the device configuration on shark, you select **Robot control is handled by a remote host**.

Robot Control Host Example

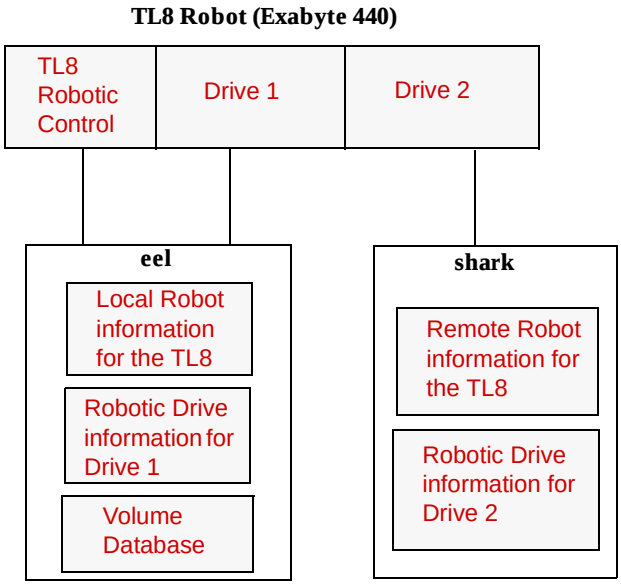

Robot is controlled locally by this device host

For this type of robot control, you have the following possibilities based on the robot type that you selected and type of media server platform where you are adding the robot.

- "Robotic Device File" on page 54
- "Robot Device" on page 55
- "LMCP Device File" on page 56
- "Library Name" on page 56

Robotic Device File

Robotic Device File applies only when adding a robot to a UNIX device host.

This file is used for SCSI connections and is located in the `/dev` directory tree on the device host.

▼ To specify the robotic device file path

1. Click **...** to browse.
2. Select a robotic device file from the list that appears in the **Devices** dialog. When you click **OK**, your selection will be entered in **Robotic device file**.

3. If the discovery operation fails to find and display all of the attached robots, click **More >>** to enter the path of the device file. Your entry will be placed in **Robotic device file**.

   If the device file entry does not exist, create the entry as explained in the NetBackup Media Manager device configuration guide.

Robot Device

Robot Device applies only when adding a robot to a Windows device host.

For information on adding RSM robots to a Windows server, see the RSM appendix in the NetBackup Media Manager system administrator's guide for Windows.

▼ To specify the robot device

1. Click **...** to browse.

   a. If the discovery operation fails to find and display *all* of the attached robots, click **More >>** to display a dialog that allows you to specify the Port, Bus, Target, and LUN numbers, or the device name. Your entry will be set in **Robot device**.

   b. If the browse operation fails for *any other* reason, a dialog appears allowing you to enter the Port, Bus, Target, and LUN numbers, or the device name. Your entry will be set in **Robot device**. You can find Port, Bus, Target, and LUN numbers in the appropriate Windows application.

2. Select a robot from the list that appears in the **Devices** dialog.

3. Click **OK.**

   The resulting value that is set in **Robot device** depends on the type of Windows device host where the robot is being added. For RSM robot types, a device name is always set in **Robot device**.

   The following table shows the resulting settings in **Robot device** for different types of Windows device hosts:

Robot Device Setting	For this Type of Windows Device Host
SCSI Port, Bus, Target, and LUN numbers	Windows NT servers.
SCSI Port, Bus, Target, and LUN numbers	Windows servers where a changer driver *is not* in control of the robot.

Robot Device Setting	For this Type of Windows Device Host
Device name (for example, Changer1)	Windows servers where a changer driver *is* in control of the robot.

LMCP Device File

LMCP Device File applies only to NetBackup Enterprise Server, and when adding a robot to a UNIX AIX device host.

▼ **To specify the LMCP file for TLH robot types controlled from an AIX device host**

❖ Specify the LMCP (Library Manager Control Point) device file name as it is configured on the AIX device host.

Library Name

Library Name applies only when adding a LMF or TLH robot on NetBackup Enterprise Server.

For more information on TLH and LMF robots, see the appendixes "IBM Automated Tape Library (ATL)" on page 493 and "Fujitsu Library Management Facility (LMF)" on page 519.

▼ **To specify the library name for LMF robots controlled from a UNIX host**

1. Use the Fujitsu `lmadmin` command to determine the library name.
2. Specify the library name.

▼ **To specify the library name for TLH robots controlled from a UNIX host (the host is not AIX or Linux)**

❖ Specify the library name that is configured on the UNIX host.

▼ **To specify the library name for TLH robots on a Windows host**

1. Determine the library name by viewing the `C:\winnt\ibmatl.conf` file.

   The following is an example entry in that file, where `3494AH` is the library name: `3494AH 176.123.154.141 ibmpc1`.

2. Specify the library name.

Robot control is handled by a remote host

This is a NetBackup Enterprise Server topic.

For this type of robot control, you have the following possibilities for the robot control host (based on the robot type and device host platform that you selected).

- "Robot Control Host" on page 57
- "DAS Server" on page 57
- "ACSLS Host" on page 57

Robot Control Host

Robot Control Host applies only to NetBackup Enterprise Server.

For more information on TLH and LMF robots, see the appendixes, "IBM Automated Tape Library (ATL)" on page 493 and "Fujitsu Library Management Facility (LMF)" on page 519.

▼ To specify the robot control host for LMF (UNIX hosts only), TL8, TLD, or TLH robots

❖ Specify the device host that controls the robot. Enter the name of the device host where you have defined or will define the robot information for this robot.

Referring to the figure, "Robot Control Host Example" on page 54, you would specify eel as the Robot Control Host when adding a robot to host shark.

DAS Server

DAS Server applies only to NetBackup Enterprise Server.

For more information on TLM robots, see the appendix, "ADIC Distributed AML Server / Scalar Distributed Library Controller" on page 507.

▼ To specify the DAS server for TLM robots controlled by an ADIC DAS/SDLC server

❖ Specify the server name of the DAS / SDLC server. This server is an OS / 2 workstation near or within the robot cabinet, or a Windows server near the ADIC Scalar library.

ACSLS Host

ACSLS Host applies only to NetBackup Enterprise Server.

The ACS library software component can be any of the following:

- Automated Cartridge System Library Software (ACSLS)

- STK Library Station
- Storagenet 6000 Storage Domain Manager (SN6000).

  This STK hardware serves as a proxy to another ACS library software component (such as, ACSLS).

Note STK LibAttach software must also be installed, if the device host that has drives under ACS robotic control is a Windows server. LibAttach for Windows is not available for servers running Windows 2003.

For an overview of ACS robots, see the appendix, "STK Automated Cartridge System (ACS)" on page 473.

▼ **To specify the ACSLS host for ACS robot types**

❖ Specify the name of the host where the ACS library software resides. On some UNIX server platforms, this host can also be a Media Manager device host or volume database host.

Robot control is attached to an NDMP host

This is a NetBackup Enterprise Server topic.

For this type of robot control, you specify the following two items.

- "Robot Device" on page 58
- "NDMP Host Name" on page 58

Robot Device

▼ **To specify the robot device**

1. Enter the name of the robotic device that is attached to the NDMP host.
2. Click **...** to enter a robot device file in the Devices dialog.

NDMP Host Name

▼ **To specify the host**

❖ Enter the name of the NDMP host where the robot is attached.

Adding Shared Drives

This is a NetBackup Enterprise Server topic.

Using the Device Configuration or the Shared Drive Media Manager wizards is recommended and is the easiest method for configuring drives in an SSO configuration. Each of these wizards guides you through the steps involved in configuring drives that will be shared among device hosts.

Determining which of the two wizards to use depends on the type of robot that controls the drives. VERITAS recommends the following:

- Use the Device Configuration wizard to configure shared drives when possible, rather than the Shared Drive wizard.
- Use the Shared Drive wizard with caution after initial device configuration.

There are also alternate ways that are available. In addition to configuring SSO faster, using these wizards eliminates many common mistakes made when SSO configuration is done using alternate methods.

See the following related topics:

- "Using the Device Configuration Wizard to Configure Shared Drives" on page 59
- "Using The Shared Drive Wizard to Configure Shared Drives" on page 60
- "Using Alternate Interfaces to Configure Shared Drives" on page 60
- "Shared Storage Option (SSO) Topics" on page 269

Using the Device Configuration Wizard to Configure Shared Drives

This is a NetBackup Enterprise Server topic.

Note When using the Device Configuration wizard in an SSO configuration, the limitations, supported devices, and device hosts are different than in a configuration without shared drives.

For TL8, TLD, or TLH robot types, VERITAS recommends using the Device Configuration wizard to add shared drives.

For ACS or TLM robot types you can use this wizard to configure shared drives, but some manual configuration is also involved. See "Configuring Shared ACS Drives" on page 478 and "Configuring Shared TLM Drives" on page 513.

See "The Device Configuration Wizard" on page 45 for more information and instructions on starting the wizard.

Using The Shared Drive Wizard to Configure Shared Drives

This is a NetBackup Enterprise Server topic.

The Shared Drive wizard can be used to configure shared drives in ACS, TL8, TLD, TLH, or TLM robots; to configure shared standalone drives, or to change an existing shared drive. This wizard has limited usage and does not configure robots.

Since this wizard does not use device serialization, it requires prior configuration details from you about your configuration before starting.

Learning More About the Shared Drive Wizard

You can obtain detailed information about this wizard before you start using the wizard, including what to expect in the wizard, a wizard overview, and limitations of the wizard.

▼ To learn about this wizard

1. Start the wizard (see "Starting the Shared Drive Wizard" on page 60).
2. From the welcome screen of the wizard, click **Help**.
3. When finished reviewing the help information in the wizard, exit the help and click **Cancel** to exit the wizard.

Starting the Shared Drive Wizard

Be sure to review the limitations of this wizard before starting. There are other possible ways to start this wizard (see "Changing the Configuration of a Drive" on page 71 and "Changing a Non-Shared Drive to a Shared Drive" on page 71).

▼ To start the shared drive wizard

1. In the NetBackup Administration Console, click **Media and Device Management** > **Devices**.
2. Click **Actions** > **New** > **Shared Drive**.

Using Alternate Interfaces to Configure Shared Drives

There are alternatives available for configuring shared drives. These alternatives require manual configuration instead of using automated methods like device serialization and have an increased chance for configuration errors. Using one of the Media Manager device configuration wizards is recommended.

These alternatives also do not include important diagnostic tools available on UNIX servers, such as the following:

- Configuration analysis (See "Using The Device Configuration Analyzer" on page 249).
- Device management reports (see "Shared Storage Option Summary Reports" on page 250).

tpconfig menus

This topic applies only to NetBackup UNIX servers.

If you use `tpconfig`, make sure that

- All hosts that are sharing the drive use the same case-sensitive name for the drive (descriptive names are recommended).
- You define a common volume database host.

For more information about using this utility, see the `tpconfig` appendix of the UNIX NetBackup Media Manager system administrator's guide.

tpconfig Command Line Interface

If you use the `tpconfig` command interface, use the `-shared yes` option with the `-add -drive` or `-update -drive` commands when you are defining shared drives. See the NetBackup commands guide for details.

Adding Drives

Note Using the Device Configuration wizard is the recommended method of configuring drives. See "The Device Configuration Wizard" on page 45 for wizard restrictions and more information.

▼ **To add drives**

1. Complete the steps necessary for the server to recognize the attached drives (see "Performing Initial Device Configuration" on page 34).
2. In the NetBackup Administration Console, click **Media and Device Management** > **Devices**.
3. Select **Actions** > **New** > **Drive**.

The properties that appear in this dialog vary slightly, depending on the type of host platform and the robot type.

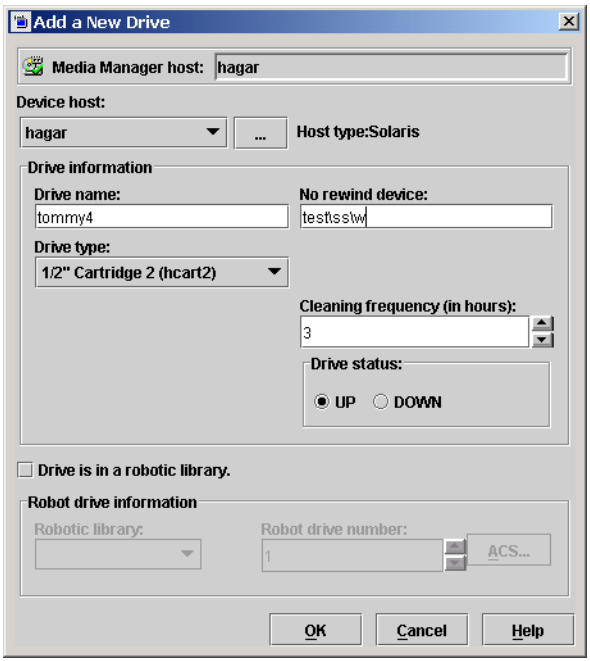

4. Specify the properties of the drive as explained in "Dialog Entries for Adding (or Changing Drives)" on page 62.

5. Click **OK**.

   The display now shows the new drive information.

6. *This step applies only to NetBackup Enterprise Server.*

   If the new drive was standalone, verify the volume database host setting and change it if necessary. See "Changing the Volume Database Host for Standalone Drives" on page 72.

Dialog Entries for Adding (or Changing Drives)

You specify properties when adding a drive or changing the properties of a drive. Note that some of these properties apply only to specific types of drives, server platforms, or NetBackup servers.

- "Device Host Section of the Dialog" on page 63

- "Drive Information Section of the Dialog" on page 63
- "Robotic Drive Information Section of the Dialog" on page 66

Device Host Section of the Dialog

"Device Host" on page 63 specifies the media server to which you are adding the drive.

Device Host

Device Host applies only to NetBackup Enterprise Server.

The host that is shown initially in the dialog box is the device host you selected earlier in the tree pane.

The operating system type for the host is displayed to the right of the **Device host** box.

▼ To specify a different device host

❖ Click the **arrow** and select a host from the list.

▼ To specify a device host that is not in the list

1. Click **...**
2. In the dialog that appears, enter the name of the host.

Drive Information Section of the Dialog

Specifies specific information about the drive.

- "Drive Name" on page 64
- "Drive Type" on page 64
- "Device Name" on page 64
- "No Rewind Device" on page 64
- "Character Device" on page 65
- "Volume Header Device" on page 65
- "Cleaning Frequency" on page 65
- "Drive Status" on page 66
- "Drive Is In A Robotic Library" on page 66

Drive Name

This name is used to identify the drive. It is important to note that each drive name *must be* unique. Descriptive names are recommended.

▼ To specify the drive name

❖ Enter a name for the drive.

Drive Type

Specifies the type of drive that you are adding.

See "Media Manager Media Types" on page 304 for more information.

▼ To specify the drive type

❖ Click the **arrow** and select from the list of the drive types that Media Manager supports.

Device Name

Device Name applies only to drives on NetBackup Windows servers.

▼ To specify the device name

1. Find the device name for the drive from the appropriate Windows application.
2. Enter the name of the drive in the box as it is recognized by the Windows server.

No Rewind Device

No Rewind Device applies only to drives on NetBackup UNIX servers.

Although both no rewind and rewind device files are usually available, Media Manager requires only the no rewind on close device file.

Device files are located in the `/dev` directory on the UNIX host. If the device files do not exist, create them as explained in the NetBackup Media Manager device configuration guide.

A no rewind device remains at its current position on a close operation. Usually the device file name is preceded or followed by the letter `n`.

If you are using NDMP drives, see the NetBackup for NDMP system administrator's guide for configuration information.

▼ **To specify the no rewind device file**

❖ Enter the no rewind device file path for the drive.

Character Device

Character Device applies only to optical disk drives on NetBackup UNIX servers.

Character device files are in the `/dev` directory on the UNIX host. If the entries do not exist, you can create them as explained in the NetBackup Media Manager device configuration guide. Media Manager uses character mode device files.

▼ **To specify the character device**

❖ Enter the character device file path for the drive.

Volume Header Device

Volume Header Device applies only to optical disk drives on NetBackup UNIX servers.

Volume header device files are in the `/dev` directory on the UNIX host. If the entry does not exist, you need to create it as explained in the NetBackup Media Manager device configuration guide.

▼ **To specify the volume header device**

❖ Enter the volume header device path for the drive.

Cleaning Frequency

Cleaning Frequency does not apply to shared drives or to any robots that do not support frequency-based cleaning.

If you want to set up a frequency-based cleaning schedule for the drive, set the number of mount hours between each drive cleaning. When you add a drive or reset the mount time to zero, Media Manager starts recording the amount of time that volumes have been mounted in that drive.

If you do not specify a cleaning frequency (the default frequency is zero), you can still utilize automated drive cleaning with the TapeAlert feature, provided all of the following conditions have been met:

- The robot supports TapeAlert.
- A cleaning volume has been defined in Media Manager.
- The host platform, robot type, and drive support drive cleaning.

If the drive is in a robotic library that supports drive cleaning and a cleaning cartridge is defined in that robotic library, cleaning occurs when the accumulated mount time exceeds the time you specify for cleaning frequency. The mount time is reset when the drive is cleaned.

See "Drive Cleaning Functions" on page 73 for information on resetting the mount time and initiating an operator-initiated cleaning of a drive. You can also perform these drive cleaning functions from the Device Monitor, in addition to setting or changing the cleaning frequency.

▼ **To specify a cleaning frequency**

❖ Click an **arrow** and select the number of hours.

Drive Status

When a drive is added, the default drive status is UP, meaning the drive is available. When the status is up, the default mode is AVR (Automatic Volume Recognition) for all drives except optical drives on an HP9000-800, which are normally in OPR mode.

▼ **To change the drive status**

❖ Click **UP** or **DOWN**.

You can also change the drive status using commands found on the **Actions** menu in **Device Monitor**.

Drive Is In A Robotic Library

▼ **To specify that a drive is under robotic control**

1. Select **Drive is in a robotic library**.
2. Enter additional information about the drive in the **Robotic drive information** section (see "Robotic Drive Information Section of the Dialog" on page 66).

▼ **To specify that a drive is a standalone (non-robotic) drive**

❖ Clear **Drive is in a robotic library**.

Robotic Drive Information Section of the Dialog

Specifies information about a drive in a robotic library.

- See "Robotic Library" on page 67
- See "Robot Drive Number" on page 67

Robotic Library

This dialog box allows you to select any currently configured robotic library that can control the drive.

▼ To specify the library

❖ Click the **arrow** and select a robotic library from the list.

Robot Drive Number

Robot drive number specifies the physical location in the robot of the drive that you are adding. When adding more than one drive to a robot, you can add the physical drives in any order. For example, in a TS8 robot you can add drive 2 before drive 1.

If you assign the wrong number Media Manager does not detect it, but an error will occur when the robotic control attempts to mount media on the wrong drive.

Note **Robot drive number** does not apply when adding drives to API robots. See "Robot drive number for API Robots" on page 67.

▼ To specify the robot drive number

1. Determine the correct robot drive number. You must determine which physical drive in the robot is identified by the logical device name (on Windows servers) or the device file (on UNIX servers).

   See "Correlating Device Files to Physical Drives When Adding Drives" on page 329 for more information.

2. Click an **arrow** and select a number for the drive.

Robot drive number for API Robots

The following topic applies to NetBackup Enterprise Server.

Robot drive number does not apply when adding drives to the following types of API robots:

- ACS robots (Automated Cartridge System). See "ACS" on page 68 for more information.

- TLH robots (Tape Library Half-inch). See "TLH" on page 68 for more information.
- TLM robots (Tape Library Multimedia). See "TLM" on page 69 for more information.

ACS

▼ To specify a drive in an ACS robot

1. Determine the physical location of the drive within the robot. You must know which physical drive in the robot is identified by the device files that you specified earlier. You establish this correlation during installation.

   The appendix, "STK Automated Cartridge System (ACS)" on page 473, has further information.

2. Select **ACS**.

3. In the dialog enter the following information:

For	Enter
ACS Number	The index (in ACS library software terms) that identifies the robot that has this drive.
LSM Number	The Library Storage Module that has this drive.
Panel Number	The robot panel where this drive is located.
Drive Number	The physical number of the drive (in ACS library software terms).

If you assign the wrong parameters for the drive, Media Manager does not detect it, but an error will occur when the robot mounts media on the wrong drive.

TLH

▼ To specify a drive in a TLH (Tape Library Half-inch) robot

1. Select **TLH**.

2. In the dialog, enter the IBM device number of the drive within the robot.

If you assign the wrong device number Media Manager does not detect it, but an error will occur when the robot mounts media on the wrong drive.

The appendix, "IBM Automated Tape Library (ATL)" on page 493, has further information.

TLM

▼ **To specify a drive in a TLM (Tape Library Multimedia) robot**

1. Select **TLM**.
2. In the dialog, enter the DAS/SDLC drive name of the drive within the robot.

If you assign the wrong drive name Media Manager does not detect it, but an error will occur when the robot mounts media on the wrong drive.

The appendix, "ADIC Distributed AML Server/Scalar Distributed Library Controller" on page 507, has further information.

Managing Your Device Configuration

The following topics explain how to manage the robots and drives in your configuration:

- "When to Perform Device Configuration Changes" on page 70
- "Using the Device Configuration Wizard for Configuration Changes" on page 70
- "Changing a Robot Configuration" on page 70
- "Changing the Configuration of a Drive" on page 71
- "Deleting Robots" on page 73
- "Deleting Drives" on page 73
- "Drive Cleaning Functions" on page 73
- "Using The Device Configuration Analyzer" on page 75
- "Performing Drive Diagnostics" on page 76
- "Using SANPoint Control to Investigate SAN Problems" on page 79
- "Printing Your Device Configuration" on page 80

The following topics apply only to NetBackup Enterprise Server.

- "Changing a Non-Shared Drive to a Shared Drive" on page 71
- "Changing the Volume Database Host for Standalone Drives" on page 72

Also see "Making Changes to Your Hardware Configuration" on page 357 for advanced configuration topics.

When to Perform Device Configuration Changes

Device configuration tasks should not be attempted when any backups or restores are running. When performing many of the following device configuration tasks, a prompt at the end of the procedure asks if you want to stop and restart `ltid`.

This action also stops and restarts any robotic processes. `ltid` is the Media Manager device daemon on UNIX and the NetBackup Device Manager service on Windows servers.

If your configuration changes are complete and you are not in a production environment, answer yes to this prompt.

Caution Stopping and restarting ltid may abort any backups, archives, or restores that are in progress.

Using the Device Configuration Wizard for Configuration Changes

Using or rerunning the Device Configuration wizard updates your Media Manager configuration to match any configuration changes. See "The Device Configuration Wizard" on page 45. For example, adding a new SCSI adapter may change the path to a robotic library. A similar change to the configuration may occur if you add a new drive or robotic library.

Changing a Robot Configuration

▼ **To change configuration information for a robot**

1. In the NetBackup Administration Console, click **Media and Device Management** > **Devices**.
2. Select the **Robots** tab in the Devices pane.
3. Select the robotic library you want to change.
4. Select **Edit** > **Change**.

   A dialog appears, showing the current information for the selected robotic library.
5. Make your changes (see "Dialog Entries for Adding and Changing Robots" on page 49).
6. Click **OK**.

Changing the Configuration of a Drive

▼ To change configuration information for a drive

1. In the NetBackup Administration Console, click **Media and Device Management** > **Devices**.
2. Select the **Drives** tab in the Devices pane.
3. Select the drive you want to change.
4. Select **Edit** > **Change**.
   a. A dialog appears showing the current information for the selected drive. Make your changes (refer to "Dialog Entries for Adding (or Changing Drives)" on page 62).
   b. *This step applies only to NetBackup Enterprise Server.*

      If the drive you selected is a shared drive, the Shared Drive wizard is started to guide you through the steps involved in changing the configuration of the drive. Follow the wizard prompts.
   c. Click **OK**.

Changing a Non-Shared Drive to a Shared Drive

This is a NetBackup Enterprise Server topic.

An SSO license is required on each master and media server (or SAN media server) to configure and use a shared drive.

▼ To change a drive to a shared drive

1. In the NetBackup Administration Console, click **Media and Device Management** > **Devices**.
2. Select the **Drives** tab in the Devices pane.
3. Select the non-shared drive that you want to change.
4. Right-click and select **Configure Shared Drive** on the shortcut menu.

   The Shared Drive wizard is started to guide you through the steps involved in changing the drive to be a shared drive.

If the drive you selected is currently a shared drive, the Shared Drive wizard guides you through the steps involved in changing the configuration properties of the drive.

Follow the wizard prompts.

Changing the Volume Database Host for Standalone Drives

This is a NetBackup Enterprise Server topic.

All standalone drives on a specific host always use the same volume database.

▼ To change the volume database host

1. In the NetBackup Administration Console, click **Media and Device Management** > **Devices**.

2. Select the **Hosts** tab in the Devices pane.

3. Select the host you want to change.

4. Select **Actions** > **Change Standalone Volume Database Host**.

   A dialog appears showing the current volume database host.

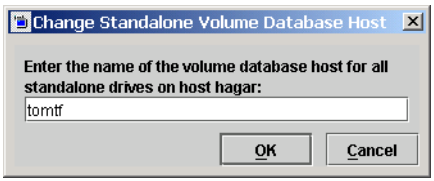

5. To change the host enter the new host name in the text box.

   You can enter the name of any server that has Media Manager installed, even if it does not have any attached drives. However, VERITAS recommends that you use a single volume database host for all your volumes (robotic and standalone). It is possible to maintain separate volume databases on multiple servers, but administration is more difficult.

   See "Media and Device Management Domain Management" on page 297 for more information.

6. Click **OK**.

Deleting Robots

Note Any drives that are configured as residing in a robot that you delete will be changed to standalone drives.

▼ To delete a robot

1. In the NetBackup Administration Console, click **Media and Device Management** > **Devices**.
2. Select the **Robots** tab in the Devices pane.
3. Select the robotic library you want to delete.
4. Select **Edit** > **Delete**.
5. Answer the delete confirmation dialog.

Deleting Drives

▼ To delete a drive

1. In the NetBackup Administration Console, click **Media and Device Management** > **Devices**.
2. Select the **Drives** tab in the Devices pane.
3. Select the drive you want to delete.
4. Select **Edit** > **Delete**.
5. Answer the delete confirmation dialog.

Drive Cleaning Functions

See "Drive Cleaning" on page 332 for background information on types of drive cleaning and cleaning tapes.

To add a cleaning tape, perform "Adding New Volumes" on page 128 and specify a cleaning tape as the media type.

Note You can also perform these drive cleaning functions from the Device Monitor. In addition, you can set or change the cleaning frequency from the Device Monitor. See "Drive Cleaning Functions" on page 241.

▼ To perform drive cleaning functions

1. In the NetBackup Administration Console, click **Media and Device Management** > **Devices**.
2. Select the **Drives** tab in the Devices pane.
3. Select the drive that you want to clean.
4. Select **Actions** > **Drive Cleaning**.

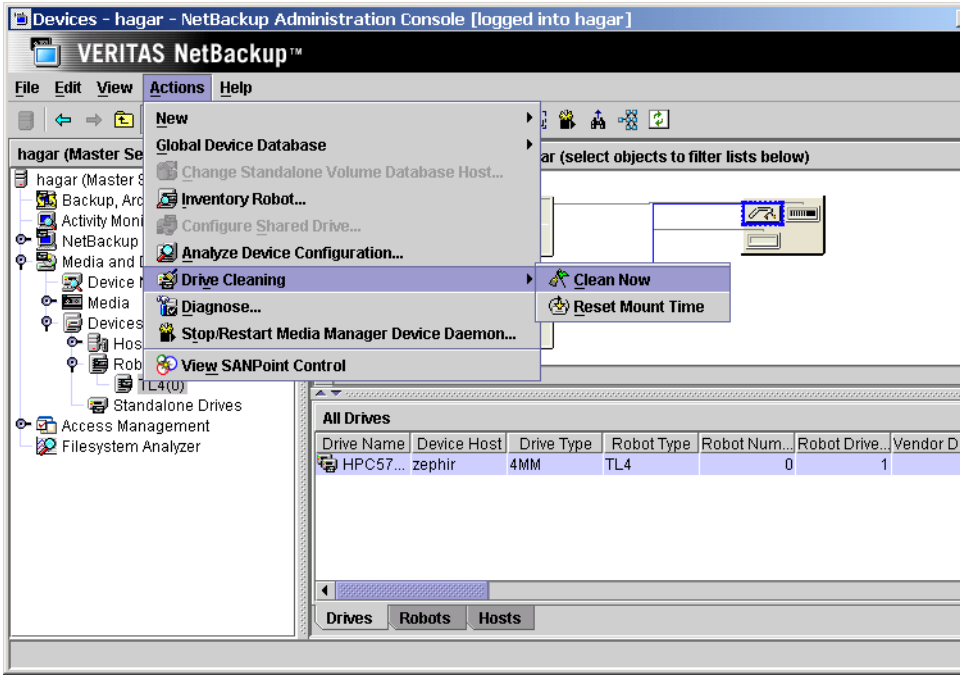

The sub-menu choices allow you to perform the following functions:

Select	To
Clean Now	Start an operator-initiated cleaning of the selected drive, regardless of the cleaning frequency or accumulated mount time. If the drive is a standalone drive, it must contain a cleaning tape and a mount request will be issued. **Clean Now** resets the mount time to zero, but the cleaning frequency value remains the same.
Reset Mount Time	Reset the mount time for the selected drive to zero. Use **Reset Mount Time** to reset the mount time after doing a manual cleaning of a drive.

To change the cleaning frequency, see Cleaning Frequency in "Dialog Entries for Adding (or Changing Drives)" on page 62 or use the drive cleaning functions in the Device Monitor.

5. Updated drive cleaning information is presented in the Drives List. See "Devices Pane" on page 25 for information about the contents of the Drives List.

Note The **Clean Now** function may take several minutes to complete, so the cleaning information in the Drives List may not be updated immediately. You may also need to refresh the Drives List display.

Using The Device Configuration Analyzer

This wizard verifies that the settings in your device configuration are consistent and checks for potential configuration problems.

Learning More About the Device Analyzer

You can obtain information about this wizard before you start using it. This help includes what to expect in the wizard, what the wizard checks, and also troubleshooting topics for regular and shard drive configurations.

▼ To learn about this wizard

1. Start the wizard (see "Starting the Device Analyzer" on page 76).

2. From the welcome screen of the wizard, click **Help**.

3. When you are finished reviewing the help information in the wizard, exit the help and click **Cancel** to exit the wizard.

Starting the Device Analyzer

You can also start the analyzer from the **Completing the Shared Drive Wizard** screen of the Shared Drive wizard or from the **Device Monitor**.

▼ **To start the analyzer**

1. In the NetBackup Administration Console, click **Media and Device Management** > **Devices**.

2. Click **Actions** > **Analyze Device Configuration**.

Performing Drive Diagnostics

Media Manager drive diagnostic functions allow you to execute and manage drive diagnostic tests. The diagnostic test steps are executed in an ordered sequence to verify the functionality of hardware devices configured for use with NetBackup. These tests should help you to troubleshoot tape drive problems.

Executing Diagnostic Tests for a Drive

▼ **To execute tests**

1. In the NetBackup Administration Console, click **Media and Device Management** > **Devices**.

2. Select **Actions** > **Diagnose...**

A dialog appears that contains Drive Information and Results sections. This dialog allows you to execute and manage the drive diagnostics tests.

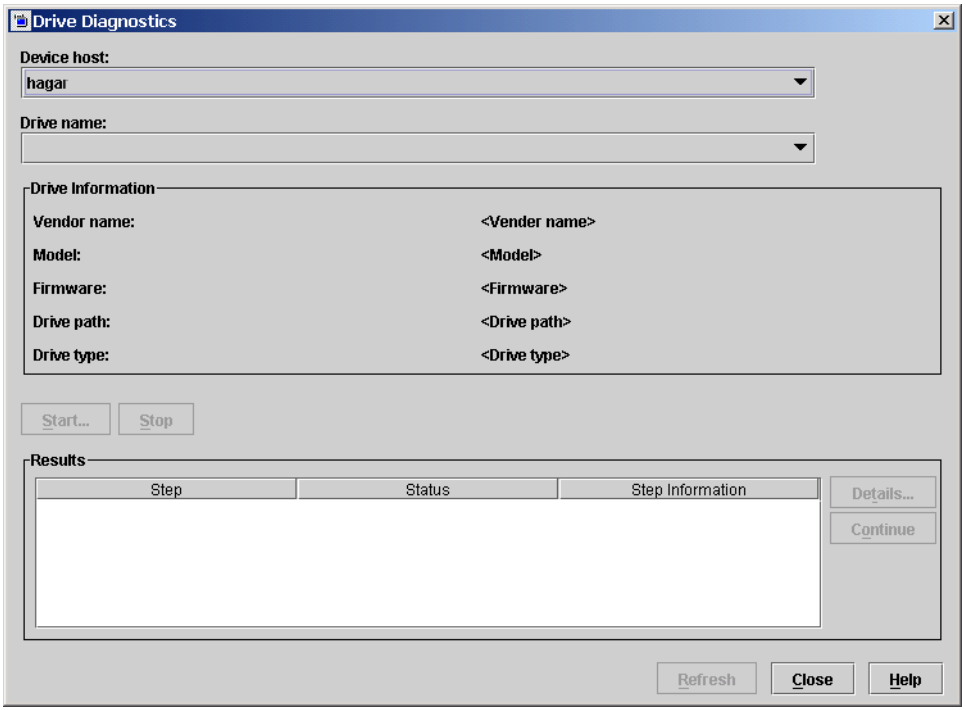

3. Select the media server that has the drives that you want to test in the Device Host box.

4. For the drive that you want to test, do the following:

   a. Manually set the drive state to DOWN.

   b. Manually insert a pre-labeled test tape with a NetBackup recorded label into the drive.

   c. In the Drive Name box, select the drive.

   Information for the drive you selected is displayed in the Drive Information section.

5. Click **Start** to start the diagnostic tests.

   The results of each step in the test are shown in the Results display. Click **Refresh** to update the Results display

Exiting a Diagnostic Test When Testing is Complete

▼ **To exit tests**

❖ Click **Close**.

If a test is still executing, an exit confirmation dialog appears.

Stopping a Diagnostic Test and Changing the Drive to be Tested

▼ **To stop tests**

1. Click **Stop**.

   The test will terminate after performing any necessary clean-up work and updating the test records to reflect that the test run has been stopped.

2. In the Device Host and the Drive Name boxes, select the host and the drive that you want to test.

3. Click **Start** to restart the diagnostic test.

Obtaining Detailed Information For a Particular Test Step

You can get information for a test step at any time during the test.

▼ **To obtain information**

1. Select a test step in the Results section.

2. Click **Details...** A dialog appears that displays detail information for the step.

   The information includes a brief explanation of the checks performed by a specific step and the instructions associated with any step that requires manual intervention. For example, a step may prompt for a new tape to be loaded into a tape drive before allowing the diagnostic session to continue with further qualification tests.

3. Click **Close** to return to the Drive Diagnostics dialog.

Managing a Test Step that Requires Operator Intervention

Operator intervention is required if the Status column of the Results display contains *Waiting*. For example, a test step may prompt for a new tape to be loaded into a drive before allowing the test to continue.

▼ To manage a test that needs intervention

1. Complete the requested operations task.
2. Click **Continue** to resume the test.

   If you click **Details** for a test step that requires operator intervention, you can also click **Continue** from the Test Details dialog to resume the test.

Using SANPoint Control to Investigate SAN Problems

SANPoint Control allows you to check for intermittent drive failures, and to see what types of SAN errors may be happening to help you diagnose problems that cause NetBackup to fail. The following table shows some typical problems and the benefits of using SANPoint Control:

Apparent NetBackup Problem	SANPoint Control Advantage
NetBackup shows that a device is up, but the backups to that device continually fail.	Select the device and launch SANPoint Control. This allows you to see if the device is still connected to the SAN, or if there are other SAN problems that have made the device unavailable, yet technically still up.
A NetBackup backup job fails intermittently and the drive is also downed intermittently. There are no errors in the NetBackup error log other than the job failed.	Select the drive and launch SANPoint Control to determine if the drive is attached. Check the alerts to see if there was a SAN problem that could have affected the drive during the time the job failed.
The NetBackup configuration was working fine and no configuration changes were made. Later NetBackup does not recognize the robots and drives that were previously recognized.	Launch SANPoint Control to check for any differences in the SAN since the time the installation was running correctly and the present. SANPoint Control can provide a snapshot of changes made in a SAN (you supply a start and finish time). The snapshot may show a switch failure, or show that the SAN was re-zoned and the desired device is no longer in a zone that NetBackup can reach.
The NetBackup administrator installs a new device and runs the Device Configuration wizard to configure it. The wizard does not recognize the newly installed device.	Launch SANPoint Control from the Drag and Drop Configuration screen of the wizard. The device does not appear in the SPC topology. If SANPoint Control cannot see the device as connected to the SAN, you should verify the connection.

▼ To launch SANPoint Control

1. In the NetBackup Administration Console, click **Media and Device Management** > **Devices**.

Note You can also launch SANPoint Control from the Device Monitor (click **Media and Device Management** > **Device Monitor**).

If there is a device selected in the Devices pane, SANPoint Control will be launched with the device as context. If there is no device selected, then SANPoint Control will be launched with the host as the context.

2. Select **Actions** > **View SANPoint Control**.

3. The SANPoint Control browser is launched. See your SANPoint Control documentation for information on usage.

   If SANPoint Control is not installed, a message appears explaining how to enable it.

▼ To access SANPoint Control reports

The SANPoint Control reports allow you to check for intermittent failures of drives, and to see what types of SAN errors may be happening to help you diagnose problems.

1. In the NetBackup Administration Console, click **NetBackup Management** > **Reports**.

2. Select **Actions** > **View SANPoint Control Reports**.

   This will launch a browser with the main reports screen. See your SANPoint Control documentation for more information.

Printing Your Device Configuration

▼ To print your current device configuration using tpconfig

The following example uses `tpconfig` to list the device configuration and redirect the output to the file named `devconf.txt`, which can then be printed:

```
tpconfig -dl > devconf.txt
```

Note `tpconfig -d` and `tpconfig -l` may truncate drive names. Use `tpconfig -dl` to obtain the full drive name.

Robot and Drive Configuration Examples

Example 1: Configuring a Robot on a Server

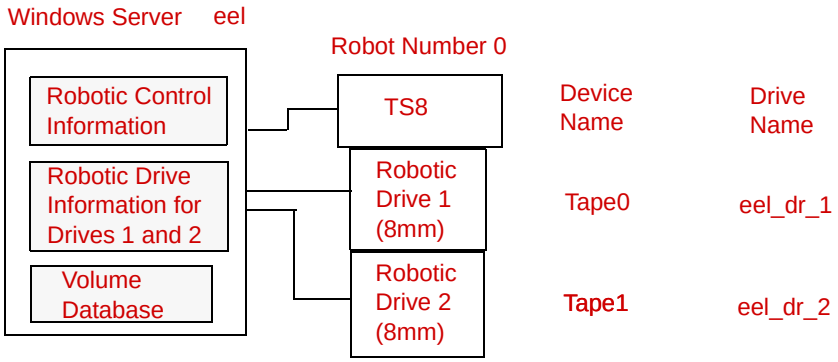

This configuration has a tape stacker containing two 8mm tape drives. The robot and drives are connected to a server running Microsoft Windows.

After installing Media Manager software and attaching the drives, run the Device Configuration wizard or complete the Add Robot and Add Drive dialog entries as shown in the following tables.

Add Robot Dialog Entries

Device Host	eel
Robot Type	TS8 (Tape Stacker 8MM)
Volume Database Host	eel
Robot Number	0
Robot is controlled locally by this device host	Set (cannot be changed for this robot type)
Robot Device	Selecting a robot device sets the SCSI Port, Bus, Target, and LUN numbers in the dialog for Windows NT servers and for other Windows servers where a changer driver *is not* in control of the robot. On Windows 2000 servers (and later supported operating system levels) where a changer driver *is* in control of the robot, selecting a robot device sets the changer name in the dialog.

Add Drive Dialog Entries (Tape0)

Device Host	eel
Drive Name	eel_dr_1
Drive Type	8mm Cartridge (8mm)
Device Name	Tape0
Cleaning Frequency	0 (hours)
Drive is in a Robotic Library	Yes
Robotic Library	TS8(0) - eel
Robot Drive Number	1

Add Drive Dialog Entries (Tape1)	
Device Host	eel
Drive Name	eel_dr_2
Drive Type	8mm Cartridge (8mm)
Device Name	Tape1
Cleaning Frequency	0 (hours)
Drive is in a Robotic Library	Yes
Robotic Library	TS8(0) - eel
Robot Drive Number	2

If eel was a UNIX server, you would complete the following dialog entries. Your actual entries needed may vary from these examples.

(UNIX): Add Robot Dialog Entries	
Device Host	eel
Robot Type	TS8 (Tape Stacker 8MM)
Volume Database Host	eel
Robot Number	0
Robot is controlled locally by this device host	Set (cannot be changed for this robot type)
Robotic Device File	/dev/sg/c0t4l0

(UNIX): Add Drive Dialog Entries (Tape0)	
Device Host	eel
Drive Name	eel_dr_1

(UNIX): Add Drive Dialog Entries (Tape0) (continued)

Drive Type	8mm Cartridge (8mm)
No Rewind Device	/dev/rmt/5cbn
Cleaning Frequency	25 (hours)
Drive Status	UP
Drive is in a Robotic Library	Yes
Robotic Library	TS8(0) - eel
Robot Drive Number	1

(UNIX): Add Drive Dialog Entries (Tape1)

Device Host	eel
Drive Name	eel_dr_2
Drive Type	8mm Cartridge (8mm)
No Rewind Device	/dev/rmt/6cbn
Cleaning Frequency	25 (hours)
Drive Status	UP
Drive is in a Robotic Library	Yes
Robotic Library	TS8(0) - eel
Robot Drive Number	2

Example 2: Configuring Standalone Drives on a Server

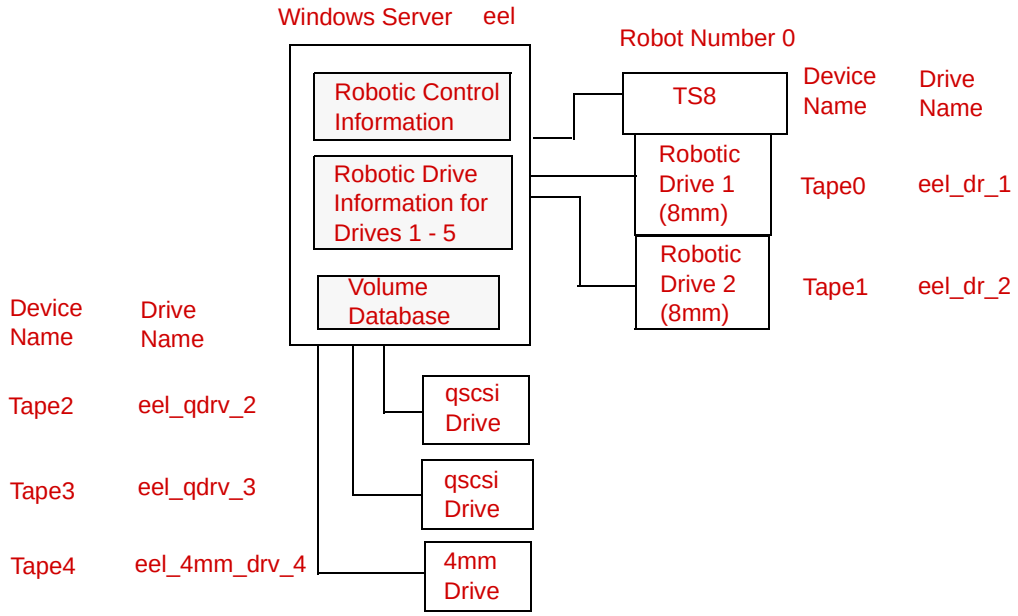

This example adds three standalone drives to the device configuration for the host eel that was shown in Example 1. As in that example, the volume database and all devices are on the same server. The following tables show the Add Drive dialog entries for the standalone drives. Configuration information for the robot and its two drives is the same as in "Example 1: Configuring a Robot on a Server" on page 81 and is not repeated here.

Add Drive Dialog Entries (Tape2)

Device Host	eel
Drive Name	eel_qdrv_2
Drive Type	1/4" Cartridge (qscsi)
Device Name	Tape2
Drive is in a Robotic Library	No

Add Drive Dialog Entries (Tape3)	
Device Host	eel
Drive Name	eel_qdrv_3
Drive Type	1/4” Cartridge (qscsi)
Device Name	Tape3
Drive is in a Robotic Library	No

Add Drive Dialog Entries (Tape4)	
Device Host	eel
Drive Name	eel_4mm_drv_4
Drive Type	4mm Cartridge (4mm)
Device Name	Tape4
Cleaning Frequency	0 (hours)
Drive is in a Robotic Library	No

If eel was a UNIX server, you would complete the following dialog entries. Your actual entries may vary from these examples.

(UNIX): Add Drive Dialog Entries (Tape2)	
Device Host	eel
Drive Name	eel_qdrv_2
Drive Type	1/4” Cartridge (qscsi)
No Rewind Device	/dev/rmt/2cbn
Drive Status	UP
Drive is in a Robotic Library	No

(UNIX): Add Drive Dialog Entries (Tape3)	
Device Host	eel
Drive Name	eel_qdrv_3
Drive Type	1/4” Cartridge (qscsi)
No Rewind Device	/dev/rmt/3cbn
Drive Status	UP
Drive is in a Robotic Library	No

(UNIX): Add Drive Dialog Entries (Tape4)	
Device Host	eel
Drive Name	eel_4mm_drv_4
Drive Type	4mm Cartridge (4mm)
No Rewind Device	/dev/rmt/4cbn
Cleaning Frequency	25 (hours)
Drive Status	UP
Drive is in a Robotic Library	No

Example 3: Configuring a Robot Distributed Among Multiple Servers

The following example applies only to NetBackup Enterprise Server.

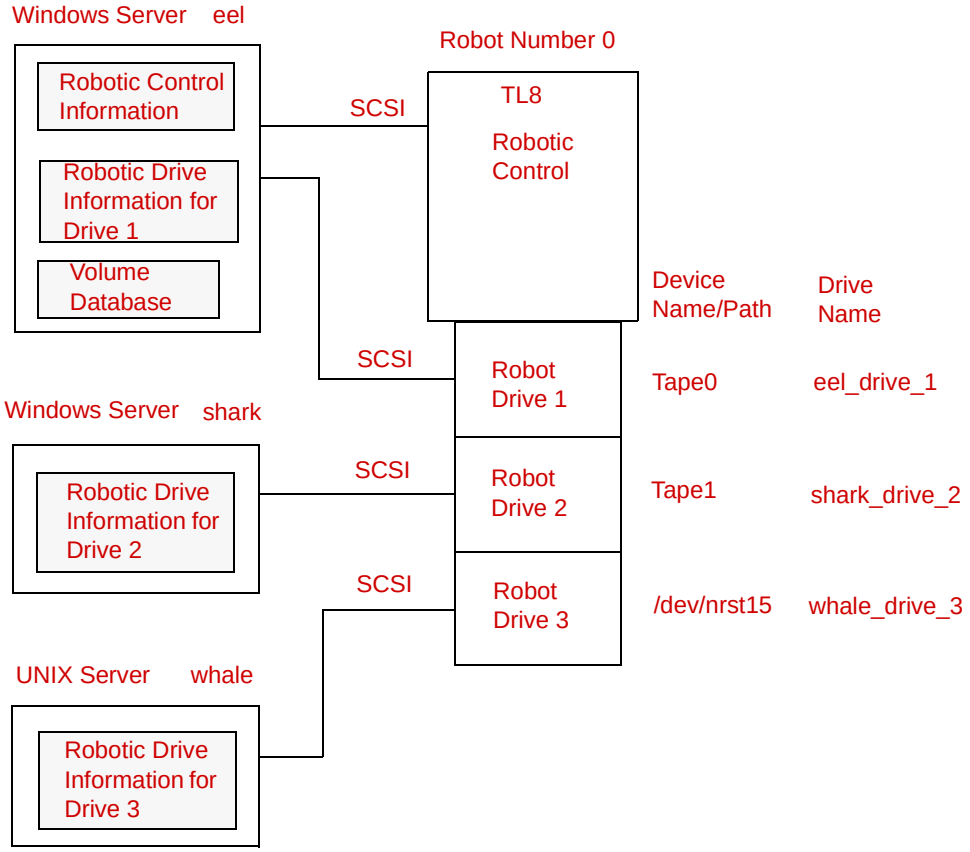

This is a more complex configuration than the previous examples because it involves a robot that has its robotic control on one server and its drives used by two other servers.

After installing Media Manager software and attaching the devices to the servers, run the Device Configuration wizard or complete the Add Robot and Add Drive dialog entries as shown in the following tables. Some things to note when examining these tables follow:

- Media for all devices is configured in a common volume database, which is located on server eel.
- The Robot Number is 0 in all three cases. This is required because the three servers refer to the same physical robot. In this case, robotic control is on host eel.
- Robot Drive Numbers correlate to the physical drive assignment within the robot.

- When you add volumes, add them to host eel because the volume database is on that server.

Configuration on the Windows Server eel

Use the following entries in the Add Robot and Add Drive dialogs:

Add Robot Dialog Entries	
Device Host	eel
Robot Type	TL8 (Tape Library 8MM)
Volume Database Host	eel
Robot Number	0
Robot is controlled locally by this device host	Set
Robot Device	Selecting a robot device sets the SCSI Port, Bus, Target, and LUN numbers in the dialog for Windows NT hosts and for other Windows servers where a changer driver *is not* in control of the robot. On Windows 2000 servers (and later supported operating system levels) where a changer driver *is* in control of the robot, selecting a robot device sets the changer name in the dialog.

Add Drive Dialog Entries (Drive 1)	
Device Host	eel
Drive Name	eel_drive_1
Drive Type	8mm Cartridge (8mm)
Device Name	Tape0
Cleaning Frequency	0 (hours)
Drive is in a Robotic Library	Yes

Add Drive Dialog Entries (Drive 1) (continued)

Robotic Library	TL8(0) - eel
Robot Drive Number	1

Configuration on the Windows Server shark

Use the following entries in the Add Robot and Add Drive dialogs:

Add Robot Dialog Entries

Device Host	shark
Robot Type	TL8 (Tape Library 8MM)
Volume Database Host	eel
Robot Number	0
Robot control is handled by a remote host	Set
Robot Control Host	eel

Add Drive Dialog Entries (Drive 2)

Device Host	shark
Drive Name	shark_drive_2
Drive Type	8mm Cartridge (8mm)
Device Name	Tape1
Cleaning Frequency	0 (hours)
Drive is in a Robotic Library	Yes
Robotic Library	TL8(0) - eel
Robot Drive Number	2

Configuration on the UNIX Server whale

Use the following entries in the Add Robot and Add Drive dialogs:

Add Robot Dialog Entries

Device Host	whale
Robot Type	TL8 (Tape Library 8MM)
Volume Database Host	eel
Robot Number	0
Robot control is handled by a remote host	Set
Robot Control Host	eel

Add Drive Dialog Entries (Drive 3)

Device Host	whale
Drive Name	whale_drive_3
Drive Type	8mm Cartridge (8mm)
No Rewind Device	/dev/nrst15
Cleaning Frequency	20 (hours)
Drive Status	UP
Drive is in a Robotic Library	Yes
Robotic Library	TL8(0) - eel
Robot Drive Number	3

Example 4: Configuring An ACS Robot on a UNIX Server

The following example applies only to NetBackup Enterprise Server.

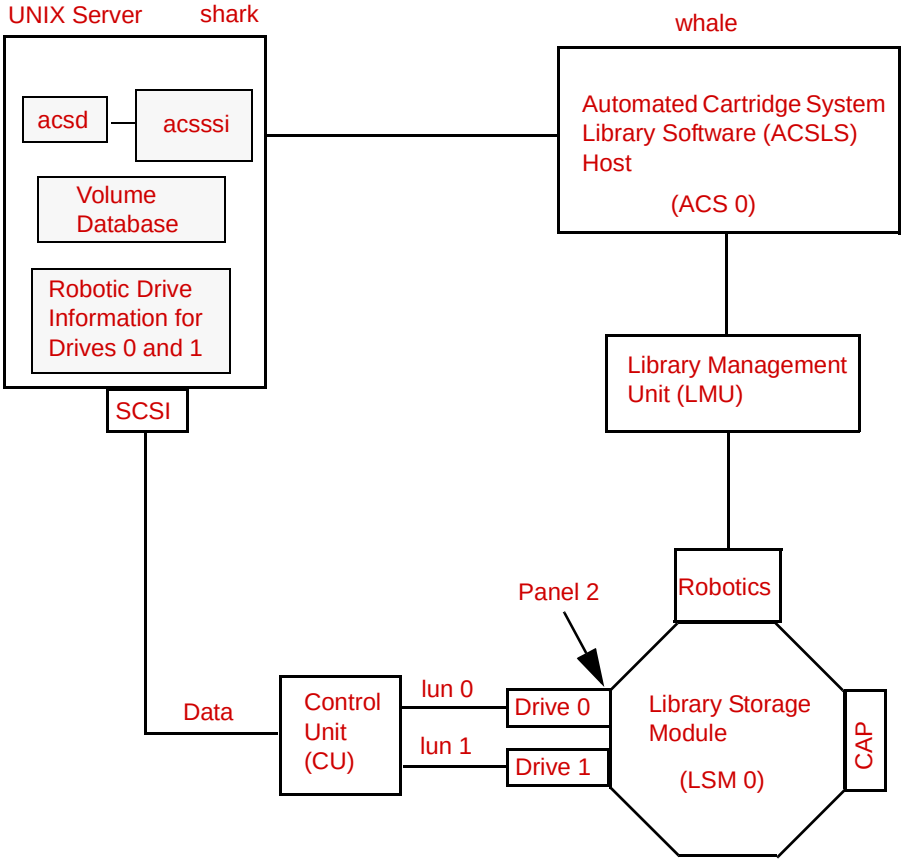

This configuration uses an Automated Cartridge System (ACS) robot for storage. Host shark can be a UNIX NetBackup master server or media server. The following tables show the Add Drive and Add Robot dialog entries for server shark. Some items to note when reviewing these tables follow:

- The ACSLS host (in the Add Robot dialog) is server whale, where the ACS library software resides. In this example, Automated Cartridge System Library Software (ACSLS) is installed as the ACS library software.

  On some server platforms it may be possible to run Media Manager software and ACS library software on the same server, eliminating the need for two servers.

- The ACS, PANEL, LSM, and DRIVE numbers are part of the ACS library software configuration and must be obtained from that system.

- Robot number and ACS number are different terms. Robot number is the robot identifier used in Media Manager. ACS number is the robot identifier in ACS library software. These numbers can be different, although they both default to zero.
- It is possible for the drives to connect through an independent Control Unit. If so, the correct Logical Unit Numbers (lun) are needed in order to find the correct tape name to use.
- The Add Robot dialog entries include an ACSLS Host entry, since communication with the ACS library software server is over the network using ACS Storage Server Interface (`acsssi`).

See the appendix, "STK Automated Cartridge System (ACS)" on page 473 for more information.

Add Robot Dialog Entries

Device Host	shark
Robot Type	ACS (Automated Cartridge System)
Volume Database Host	shark
Robot Number	0
Robot control is handled by a remote host	Set (cannot be changed for this robot type)
ACSLS Host	whale

Add Drive Dialog Entries (Drive 0)

Device Host	shark
Drive Name	shark_drive_0
Drive Type	1/2" Cartridge (hcart)
No Rewind Device	/dev/rmt1.1
Drive is in a Robotic Library	Yes
Robotic Library	ACS(0) - whale

Add Drive Dialog Entries (Drive 0) (continued)

ACS	ACS Number: 0 LSM Number: 2 PANEL Number: 0 DRIVE Number: 0

Add Drive Dialog Entries (Drive 1)

Device Host	shark
Drive Name	shark_drive_1
Drive Type	1/2” Cartridge (hcart)
No Rewind Device	/dev/rmt1.1
Drive is in a Robotic Library	Yes
Robotic Library	ACS(0) - whale
ACS	ACS Number: 0 LSM Number: 2 PANEL Number: 0 DRIVE Number: 1

Example 5: Configuring A TLH Robot on a UNIX Server

The following example applies only to NetBackup Enterprise Server.

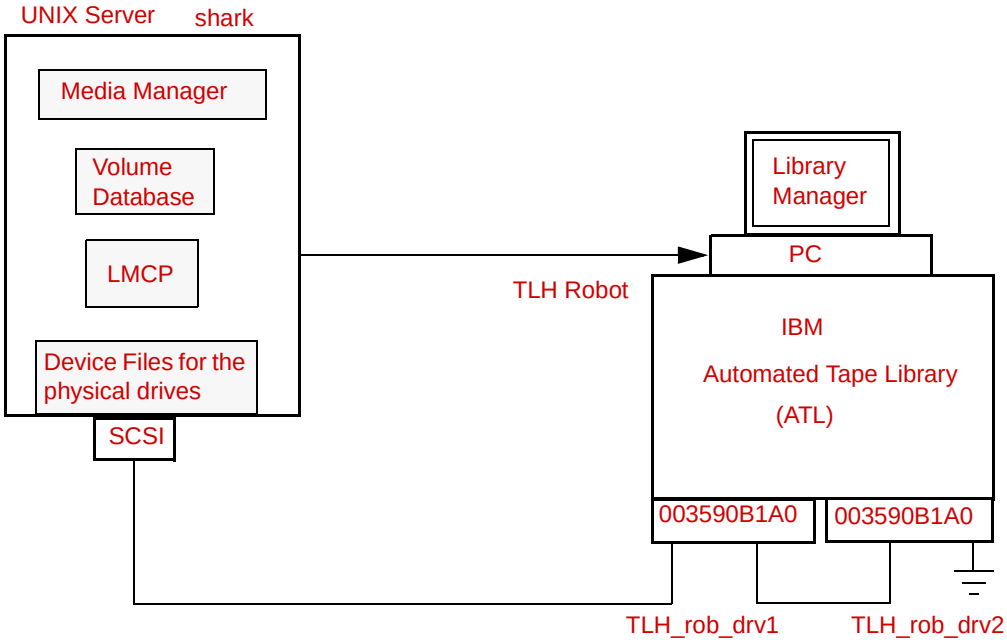

This configuration adds a TLH robot to the configuration. The server shark can be a UNIX AIX, Solaris, HP-UX, IRIX, or Windows server, and can be a NetBackup master server or media server.

The following tables show the Add Drive and Add Robot dialog entries. Some things to note when reviewing these tables follow:

- The robot control host is the server shark. Note that it is also possible to have the robotic control (`tlhcd`) on a different server.
- The main difference between configuring a TLH robot and other robot types is the robotic device file. The robotic device file is the Library Manager Control Point (LMCP) file on AIX systems and is the library name on non-AIX systems.

  In this example, shark is a AIX server, so the LMCP file is specified for the robotic device file.

  If shark was a UNIX server that was not AIX or a Windows server, you would specify the library name (for example 3494AH).

  See the appendix, “IBM Automated Tape Library (ATL)” on page 493 for more information.

- The drive configuration uses the IBM device number. A cleaning frequency cannot be assigned using Media Manager.

Add Robot Dialog Entries

Device Host	shark
Robot Type	TLH (Tape Library Half-inch)
Volume Database Host	shark
Robot Number	0
Robot is controlled locally by this device host	Set
LMCP Device File	/dev/lmcp0

Add Drive Dialog Entries (Drive 1)

Device Host	shark
Drive Name	TLH_rob_drv1
Drive Type	1/2” Cartridge (hcart)
No Rewind Device	/dev/rmt4.1
Drive Status	UP
Drive is in a Robotic Library	Yes
Robotic Library	TLH(0) - shark
Vendor Drive Identifier	003590B1A00

Add Drive Dialog Entries (Drive 2)	
Device Host	shark
Drive Name	TLH_rob_drv2
Drive Type	1/2” Cartridge (hcart)
No Rewind Device	/dev/rmt1.1
Drive Status	UP
Drive is in a Robotic Library	Yes
Robotic Library	TLH(0) - shark
Vendor Drive Identifier	003590B1A01

Example 6: Configuring A TLM Robot on a UNIX Server

The following example applies only to NetBackup Enterprise Server.

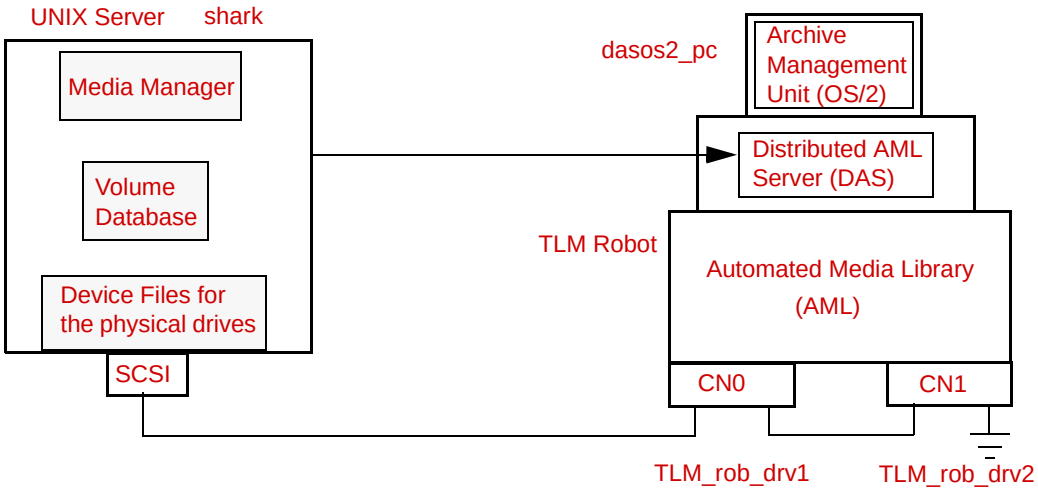

This configuration adds a TLM robot. The device configuration for this robot is similar to the TS8 robot explained in “Example 1: Configuring a Robot on a Server” on page 81.

However with a TLM robot, you specify the DAS/SDLC server instead of a robot control host. This server may reside on an IBM OS/2 system, usually in or near the Grau cabinet, or on a Windows server.

In this example, the DAS Server entry is dasos2_pc. It is also necessary to verify that the DAS/SDLC server is configured to recognize server shark as a client and that the AML drives are allocated to shark.

See the appendix, "ADIC Distributed AML Server/Scalar Distributed Library Controller" on page 507 for further information.

Add Robot Dialog Entries

Device Host	shark
Robot Type	TLM (Tape Library Multimedia)
Volume Database Host	shark
Robot Number	0
Robot control is handled by a remote host	Set (cannot be changed for this robot type)
DAS Server	dasos2_pc

Add Drive Dialog Entries (Drive 1)

Device Host	shark
Drive Name	TLM_rob_drv1
Drive Type	1/2" Cartridge (hcart)
No Rewind Device	/dev/rmt/rmt0h
Cleaning Frequency	25 (hours)
Drive Status	UP
Drive is in a Robotic Library	Yes
Robotic Library	TLM(0) - shark
Vendor Drive Identifier	CN0

Add Drive Dialog Entries (Drive 2)	
Device Host	shark
Drive Name	TLM_rob_drv2
Drive Type	1/2” Cartridge (hcart)
No Rewind Device	/dev/rmt/rmt1h
Cleaning Frequency	25 (hours)
Drive Status	UP
Drive is in a Robotic Library	Yes
Robotic Library	TLM(0) - shark
Vendor Drive Identifier	CN1

Managing Media 3

This chapter explains how to use the media management window to add and manage the removable media that Media Manager controls. These media are referred to as volumes, and are assigned media IDs and other attributes that are used to track and manage them.

The chapter, "Managing Media in Robots" on page 165 explains how to manage media in robots.

If you have Backup Exec volumes to manage, see the Backup Exec tape reader topics in the NetBackup system administrator's guides for Windows servers.

If you have volumes without barcodes to manage, see "Using the Physical Inventory Utility for Non-Barcoded Media" on page 348.

See the following topics:

- "Starting Media Management" on page 102
- "Using the Media Management Window" on page 102
- "Configuring Volume Pools" on page 118
- "Methods Available for Injecting and Ejecting Volumes" on page 124
- "Adding New Volumes" on page 128
- "Using the Volume Configuration Wizard" on page 140
- "Moving Volumes" on page 141
- "When to Delete Volumes" on page 147
- "Ejecting Volumes From Robots (Actions Menu Command)" on page 149
- "Labeling Media" on page 150
- "Erasing Media Functions" on page 151
- "Deassigning Volumes" on page 153
- "Changing the Attributes for a Volume" on page 155
- "Changing the Volume Group of a Volume" on page 159
- "Moving A Volume Group" on page 160

- "Exchanging Volumes" on page 162
- "Recycling Volumes" on page 163

The following topics apply only to NetBackup Enterprise Server.

- "Administering Media on Other Servers" on page 116

Starting Media Management

In the NetBackup Administration Console, click **Media and Device Management** > **Media**. The media management window similar to the following appears:

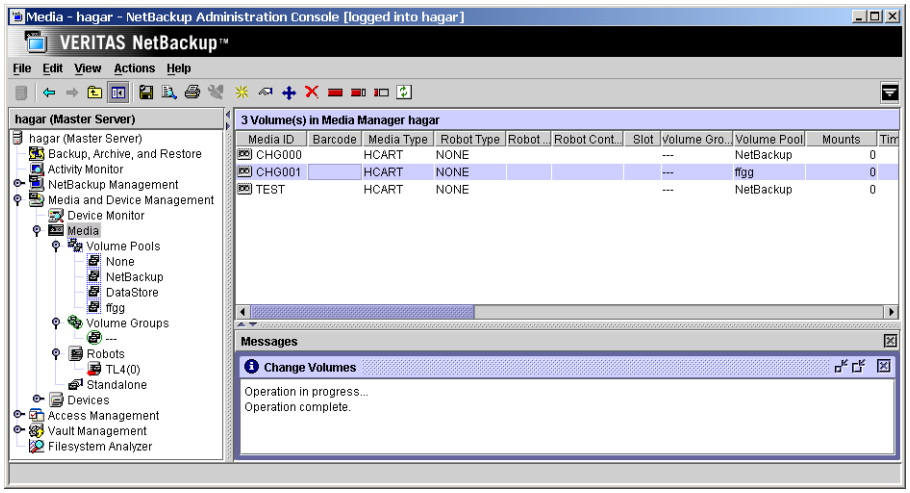

In addition to the tree pane displayed on the left, a volume pane is displayed on the right when you start media management. A third pane for task messages is displayed when needed.

Using the Media Management Window

The following topics describe the media management window:

- "Menus and Commands" on page 103
- "Toolbars" on page 104
- "Tree Pane" on page 105
- "Volumes Pane" on page 106
- "Messages Pane" on page 114

- "Shortcut Menus and Commands" on page 114
- "Customizing the Window" on page 115
- "Allowable Media Manager Characters" on page 115

Menus and Commands

The media management window contains the menus and commands shown in the following table.

The menu items are enabled and available based on the items that are currently selected in the tree pane or volumes pane. For example, if a volume group is selected in the tree pane, the **Delete** command is enabled on the **Edit** menu.

Media Management Menus and Commands

Menu	Commands
File	**Change Server** - Displays a dialog that allows you to change to a different host that is running NetBackup. See "Managing Media on Other Servers" on page 117 for details. **New Window from Here** - Starts another instance of the NetBackup Administration Console node that was active. **Adjust Application Time Zone** - Displays a dialog that allows you to manage the timezone. NetBackup Console can execute in a different timezone than the timezone of the server on which it was initiated. See the NetBackup system administrator's guide for UNIX for more information. **Export** - Saves configuration information or data about the selected device monitor to a file. **Page Setup** - Displays a setup dialog for printing. **Print Preview** - Previews the print image. **Print** - Prints the contents of the volumes pane. **Close Window** - Closes the current window. **Exit** - Closes all open windows.
Edit	**New** - Displays a dialog to add a new item of the type that is currently selected. **Change** - Displays a dialog for changing the configuration of the selected items. **Delete** - Deletes selected items from the configuration. **Find** - Command for finding items in the display lists.

Media Management Menus and Commands (continued)

Menu	Commands
View	Contains commands for specifying your viewing preferences for the media management window, including showing and hiding the toolbar or tree, sorting, filtering, column layout, and refreshing the display. See "Customizing the Window" on page 115.
Actions	**New** - Displays a dialog for adding volumes or volume pools to a configuration. **Change Volume Group** - Displays a dialog for changing the volume group for selected volumes. **Move** - Displays a dialog for moving volumes. **Rescan/Update Barcodes** - Rescans the barcodes in the selected robotic library and updates the barcodes for the selected volumes, as necessary. **Eject Volume(s) From Robot** - Ejects selected single or multiple volumes to the robot's media access port. **Label** - Displays a dialog for labeling unassigned media. **Long Erase**- Displays a dialog to perform a full erase of unassigned media. **Quick Erase**- Displays a dialog to perform a short erase of unassigned media. **Stop/Restart Media Manager Device Daemon** - Controls the Media Manager device daemon. **Inventory Robot** - Displays a dialog with choices for performing an inventory of the selected robot or updating the volume configuration to match the contents of the robot.
Help	**Help Topics** - Provides online help information for the NetBackup Console. **Troubleshooter** - Helps you to debug errors. **License Keys** - Provides information about your active and registered license keys. **About NetBackup Administration Console** - Displays program information, version number, and copyright information. **Current NBAC User** - Provides NetBackup Access Control information for the current user. Gives the permissions for the user that you are currently logged in as.

Toolbars

The toolbar buttons of the Media window provide shortcuts for commands that are on the menus. Also see "Customizing the Window" on page 115.

▼ To show or hide the toolbar buttons

1. In the NetBackup Administration Console, click **Media and Device Management** > **Media**.

2. Click **View** > **Show Toolbar**.

Tree Pane

The tree pane for **Media** contains nodes for **Volume Pools**, **Volume Groups**, **Robots**, and **Standalone**.

The display in the Volumes pane (the pane on the right) shows the volumes that are in the volume database on this server. If you add any volumes, they are added to this volume database.

If there are no volumes configured in the volume database, the Volumes pane will be blank. Selecting different items in the tree pane filters the lists that are shown in the Volumes pane.

The following figure shows an expanded view of the Media tree pane:

The Media Manager server that you are currently connected to.

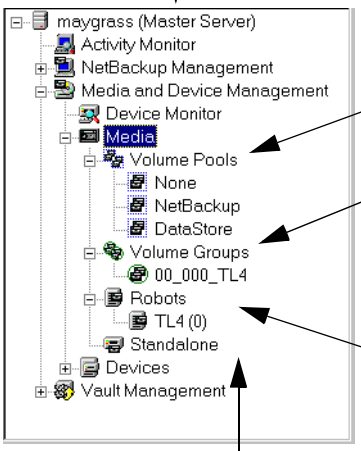

If you select Volume Pools, the Volumes pane contains information for all volume pools in the volume database on this server (see the "Volume Pools List" on page 107). Selecting an individual pool displays information about the volumes in that pool (see the "Volumes List" on page 110).

If you select Volume Groups, the Volumes pane contains information for all volume groups in the volume database on this server (see the "Volume Groups List" on page 108). Selecting an individual group displays information about the volumes in that group (see the "Volumes List" on page 110).

If you select Robots, the Volumes pane contains information for all robots (see the "Robots List" on page 109). Selecting an individual robot displays information about the volumes in that robot and in the volume database on this server (see the "Volumes List" on page 110).

If you select Standalone, the Volumes pane contains information for all the volumes that are configured for use with standalone drives and in the volume database on this server (see the Volumes List).

The following points apply to NetBackup Enterprise Server.

Before adding volumes on the selected server, check the volume database host setting for the robot or standalone drive to verify that the volume will be added to the correct volume database. See "Administering Media on Other Servers" on page 116.

If the icon shown for a robotic library contains a red arrow, the current server is *not* the volume database host for the robotic library.

You can view or configure volumes on another master or media server. See "Administering Media on Other Servers" on page 116 for more information.

Volumes Pane

This pane lists the volumes in the volume database located on the current media server (or SAN media server).

▼ To manage the lists in the Volumes Pane

1. The **Edit** menu has commands for finding items and is useful if you are managing many volumes.

2. You can also use **View** > **Column Layout** to rearrange or hide specific columns in the Volumes pane. Some of the columns are hidden initially by default.

The following tables describe the columns in the various volume lists.

- "Volume Pools List" on page 107
- "Volume Groups List" on page 108
- "Robots List" on page 109
- "Volumes List" on page 110

Volume Pools List

▼ To view the volume pools list

❖ Select **Media** > **Volume Pools** in the tree pane.

The following information for all of the volume pools is then displayed in the Volumes Pane.

Volume Pools List

Column	Description
Volume Pool	Name of the volume pool. Volumes in a pool are grouped together for use by a single application and are protected from access by other applications and users. The following volume pool names are reserved: • None is the default pool for users of applications, other than NetBackup and Storage Migrator. • NetBackup is the default pool name for NetBackup. • DataStore is the default pool name for DataStore. • HSM is the default pool name for VERITAS Storage Migrator.
Number	Number assigned to the volume pool. This number is assigned by NetBackup. The following numbers are reserved: • 0 is the None (default) pool. • 1 is the NetBackup pool. The DataStore pool is assigned the next available pool number.

Volume Pools List (continued)

Column	Description
User	Contains the value ANY or the user ID (for example, root(0)).
Host	Name of the host that is allowed to request and use the volumes in this volume pool or the value ANYHOST.
Group	Identifies the UNIX user group for this volume pool or contains the value NONE.
Description	Description for the volume pool. You add the description when you configure a volume pool.
Scratch	Contains Yes, if the volume pool is the scratch volume pool. Contains No, if the volume pool is not the scratch volume pool. NetBackup allows only one scratch pool.

Volume Groups List

▼ To view the volume groups list

❖ Select **Media** > **Volume Groups** in the tree pane.

The following information for all of the volume groups is then displayed in the Volumes Pane.

Volume Groups List

Column	Description
Volume Group	Name of the volume group. A volume group defines the volume by location and is a logical group of volumes that are at the same physical location. Volume groups are a convenience for administrating multiple volumes. By using a volume group, you can logically move a set of volumes between a robotic library and a standalone location, or delete them by specifying the group name rather than specifying each individual media ID. More than one volume group can share the same location. For example, a robotic library can contain volumes from more than one volume group and there can be more than one standalone volume group. All volumes in a volume group must have a compatible media type.
Media Type	Media Manager media type of the volume group.

Volume Groups List (continued)

Column	Description
Robot Number	Number of the robot that contains this volume group. If the robot type is NONE, this column is blank.
Robot Type	Type of robot that contains this volume group. NONE in this column means a standalone volume group.
Robot Control Host	Name of the robot control host for the volumes in this volume group. If the robot type is NONE, this column is blank.
Volume Count	Number of volumes in this volume group.

Robots List

▼ To view the robots list

❖ Select **Media** > **Robots** in the tree pane.

The following information for all of the robots is then displayed in the Volumes Pane. Review the Note column for any restrictions.

Robots List

Column	Description	Note
Robot Name	The name of the robot (comprised of the robot type and robot number), for example TLD(3).	
Device Host	The name of the device host where this robot is defined.	
Robot Type	Type of robot that contains this volume. See "Media Manager Robot Types" on page 302 for a list of supported robot types.	
Robot Number	Number of the robot.	
Volume Database Host	The name of the volume database host for the volumes in this robot.	
Serial Number	The serial number of the robot.	
Robotic Path	Contains the path of the robot or is blank for remote robots.	

Robots List (continued)

Column	Description	Note
Robot Control Host	Name of the host that is providing the robotic control. This column contains a host name only for robots where the robot control is handled by a different host than the host where the robot is attached.	Applies only to NetBackup Enterprise Server.
Port	The SCSI port number of the robot. This column may be blank if there is a changer path configured for the robot.	Applies only to NetBackup Windows servers.
Bus	The SCSI bus number of the robot.	Applies only to NetBackup Windows servers.
Target	The SCSI target number (or SCSI ID) of the robot.	Applies only to NetBackup Windows servers.
Lun	The logical unit number of the robot.	Applies only to NetBackup Windows servers.
Inquiry Information	Contains device information returned from the device. This information is used to identify the device. For example, vendor ID, product ID, and product revision.	

Volumes List

▼ To view the volumes list

❖ Select an item under **Volume Pools**, **Volume Groups**, **Robots**, or **Standalone** in the tree pane.

The volumes list is filtered based on the selected item and that information is displayed in the Volumes pane. Review the Note column for any restrictions.

Volumes List

Column	Description	Note
Media ID	A Media Manager ID that identifies the volume in six or less alphanumeric characters. The media ID is specified when you add volumes or generated when you use a robot inventory to add volumes.	
Barcode	The alphanumeric representation of the barcode label attached to a volume. A barcode is used to identify the volume.	
Media Type	Media type of the volume. See "Media Manager Media Types" on page 304 for a list of the supported media types.	
Robot Type	Type of robot that contains this volume. See "Media Manager Robot Types" on page 302 for a list of supported robot types. NONE in this column means a standalone volume.	
Robot Number	Number of the robot that contains this volume. If the volume is for a standalone drive or the volume is part of a group that was moved out of a robot (with the intent of being moved back into a robot), this column is blank.	
Robot Control Host	Name of the host that controls the robot that contains this volume. This host is providing the robotic control. If this column contains NONE, there is no specific robot control host (the robot is controlled from multiple hosts). If this column is blank, the volume is for a standalone drive.	Applies only to NetBackup Enterprise Server.
Slot	Slot in the robot that contains the volume. This column is blank for API robots, since Media Manager does not track slot information for these robots. For API robots, the robot vendor (or operating system software in the case of RSM robots) tracks the slot information.	
Volume Group	Name of the volume group for this volume. See "Volume Groups List" on page 108 for more information.	

Volumes List (continued)

Column	Description	Note
Volume Pool	The volume pool defines the usage for the volume. Volumes in a pool are grouped together for use by a single application and are protected from access by other applications and users. See "Volume Pools List" on page 107 for more information. None is the default pool name for users of applications, other than NetBackup, DataStore, and Storage Migrator. ◆ NetBackup is the default pool name for NetBackup. ◆ DataStore is the default pool name for DataStore. ◆ HSM is the default pool name for VERITAS Storage Migrator.	
Mounts	Number of times that the volume has been mounted (does not apply to cleaning media types).	
Time Assigned	Shows the date when the volume was assigned for use. You cannot delete a volume or change its volume pool while it is assigned to an application.	
Status	Status applies only to volumes that are assigned to NetBackup, Storage Migrator, or Storage Migrator for Microsoft Exchange. There is also a date in the Time Assigned column for assigned volumes. Values for status are as follows: ◆ 0 - NetBackup The volume is assigned to NetBackup regular backups. ◆ 1 - Catalog The volume is assigned to NetBackup catalog (database) backups. ◆ 2 - Storage Migrator The volume is assigned to Storage Migrator for UNIX. ◆ 3 - Storage Migrator The volume is assigned to Storage Migrator for Microsoft Exchange or Storage Migrator for Windows.	
Side/Face	Location of the volume. If the media type is an optical disk, this column shows A or B, representing the platter side on which the volume is located. For any other media type, this column is blank.	

Volumes List (continued)

Column	Description	Note
Partner	For optical disks, this column shows the media ID of the volume on the other side of the optical platter. For all other media types, the column is blank. You define this value as Partner ID when you add the volume.	
Max Mounts	Number of times the volume can be mounted. 0 in this column refers to unlimited mounts. If the maximum mounts value is reached, a message is logged to the system application log and Media Manager allows no further mounts in write mode. Further mounts in read mode are allowed.	
First Mount	Date and time that the volume was first mounted by Media Manager.	
Last Mount	Date and time that the volume was last mounted by Media Manager.	
Expiration Date	Indicates the age of the volume. If the expiration date is reached, the volume is considered too old to be reliable and Media Manager allows no further mounts in write mode. Further mounts in read mode are allowed, but a message is logged to the system application log indicating that the expiration date has been reached. If the column is blank, the volume has no expiration date.	
Cleanings Remaining	For a cleaning tape, this column shows how many more times the tape can be used. To use a cleaning tape, the value in this column must be greater than zero. You can change this count by selecting the volume and using **Edit** > **Change**.	
Created	Date and time that the volume was added to Media Manager.	
Description	Describes the media in 25 or less alphanumeric characters. You specify a description when you add volumes.	
Vault Name	Contains the name of the vault where this volume is located.	Applies only to the NetBackup Vault option.
Date Vaulted	Contains the date this volume was sent to the vault.	Applies only to the NetBackup Vault option.

Volumes List (continued)

Column	Description	Note
Return Date	Contains the date when this volume returns from the vault.	Applies only to the NetBackup Vault option.
Vault Slot	Contains the location where this volume is stored in the vault.	Applies only to the NetBackup Vault option.
Session ID	Contains the ID of the vault session that ejected this volume.	Applies only to the NetBackup Vault option.
Vault Container ID	Contains the ID of the container where this volume is stored.	Applies only to the NetBackup Vault option.

Messages Pane

The **Messages** pane appears in the lower right below the Volumes pane, and is used to display messages about a task that is running as a background process. This pane is displayed only if there is an informative message or error message for the task. If the task completes normally, the pane is not displayed.

▼ To manage the messages pane

❖ Click one of the icons in the title bar of the pane to minimize, maximize, or close the pane.

Shortcut Menus and Commands

Shortcut menus work in the context of what object is currently selected in a pane. Shortcut commands are also available on the menus or toolbars.

▼ To display a shortcut menu

❖ Click the right mouse button while the pointer is over a pane or a selection of a pane.

Short Cut Menu

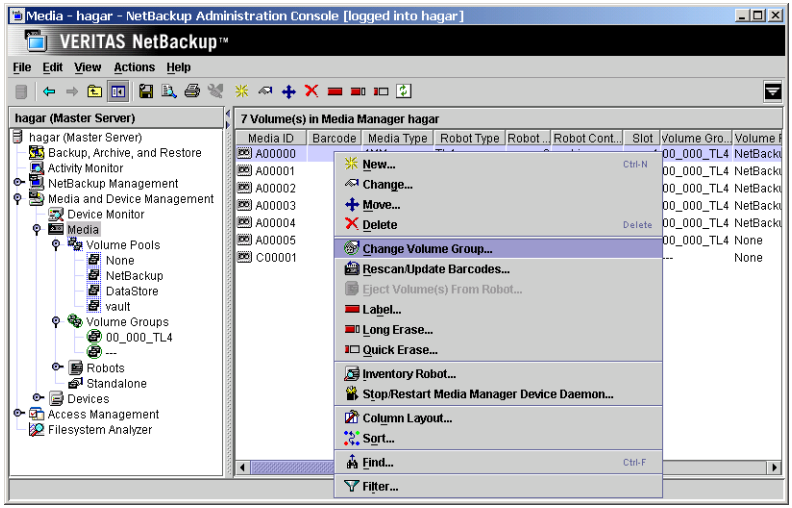

Customizing the Window

The **View** menu has options for sorting, filtering, and changing the layout and appearance of the panes.

See the NetBackup administrator's guide for UNIX or the NetBackup administrator's guide for Windows for more details.

▼ To show or hide columns, or rearrange the order of columns

Click **View** > **Column Layout**.

Allowable Media Manager Characters

The following set of characters can be used in user-defined names, such as volume groups, volume pool names (volume pool names are case sensitive), and media IDs that you enter when creating these entities. These characters must be used even when specifying these items in foreign languages.

Do not use a minus as the first character. Spaces are only allowed in a comment for a drive.

- Alphabetic (A-Z a-z)
- Numeric (0-9)
- Period (.)

- Plus (+)
- Minus (-)
- Underscore (_)

Administering Media on Other Servers

This is a NetBackup Enterprise Server topic.

The following topics explain media administration on other servers:

- "Volume Database Best Practices" on page 116.
- "Determining the Volume Database Host for a Device" on page 116.
- "Managing Media on Other Servers" on page 117.

Volume Database Best Practices

This is a NetBackup Enterprise Server topic.

Each host that has Media Manager installed can have a volume database. However to simplify administration, VERITAS recommends that you centralize the volume database on one host and keep the volume databases on other hosts empty. Adding volumes to multiple hosts makes administration more complicated.

You can enforce this practice by adding a `NOT_DATABASE_HOST` entry in the Media Manager configuration file (`vm.conf`). The `vmdb_merge` command can be used to merge volume, pool, and media databases. See the NetBackup commands guide for details.

For recommended practices, see "Media and Device Management Domain Management" on page 297.

Determining the Volume Database Host for a Device

This is a NetBackup Enterprise Server topic.

The configuration for each robotic library or set of standalone drives designates the volume database host that contains the volume information for those devices. Before adding a volume to the volume configuration, you *must* be managing the correct host or the volume will not be found when it is required.

▼ To determine the volume database host for a drive in a robotic library

1. In the NetBackup Administration Console, click **Media and Device Management** > **Devices**.
2. Click the **Robots** tab in the Devices pane.

   The Volume Database Host column shows the name of the host for the volumes in this robotic library.

▼ To determine the volume database host for a standalone drive

1. In the NetBackup Administration Console, click **Media and Device Management** > **Devices**.
2. Click the **Hosts** tab in the Devices pane.

   The Standalone Volume Database Host column shows the name of the host for all of the standalone drives controlled by this host.

Managing Media on Other Servers

This is a NetBackup Enterprise Server topic.

Initially, you can manage media on the server where you are running NetBackup. The name of this server is shown at the top of the tree pane. For example: spain (Master Server)

You also can change from the current server to a different master or media server. If you change from a NetBackup Enterprise Server to a NetBackup Server, the functionality available on the new server is limited to the functionality supported by NetBackup Server.

You cannot change from NetBackup Server to a NetBackup Enterprise Server.

▼ To change to a different master or media server

1. In the NetBackup Administration Console, click the server name shown at the top of the tree.
2. Click **File** > **Change Server**.
3. In the dialog that appears, do *one* of the following to specify the server.
   - Enter the name of the server.
   - Select a server from the servers shown in the list.

You can also click **Remove** to delete a server from the list of available hosts.

4. Click **OK**.

   The name of the new server appears and the volumes pane shows the volume information for the new server. This information is obtained from the volume database for the new server.

In addition to using **File** > **Change Server** to manage media on other servers, you can specify a different server when logging into NetBackup.

The name of the UNIX host that you specify in the Login box, when starting the NetBackup Administration interface, must be in the NetBackup `bp.conf` file on the remote UNIX host where you want to monitor devices.

If you encounter problems or for more information on managing media on other servers, see the following topics:

- "Remote Administration of Other UNIX Servers" on page 39.
- "Media Manager Security" on page 40.

Configuring Volume Pools

A volume pool identifies a logical set of volumes by type of usage. Associating volumes with a volume pool protects them from access by unauthorized users, groups, or applications.

With the exception of the volume pools that are automatically created by NetBackup, you must create a volume pool before you can add volumes to a volume pool. The following volume pools are automatically created (see "Volume Pools List" on page 107):

- Media Manager creates a pool, named NetBackup, for NetBackup use.
- NetBackup creates a pool, named DataStore, for DataStore use.
- On UNIX hosts, a pool is also created for VERITAS Storage Migrator volumes.

During initial configuration, it is easiest to create all of your volume pools first. Then as you add volumes, you can assign them to volume pools.

It is also possible to configure a scratch pool from which Media Manager can transfer volumes, when a volume pool has no volumes available.

For background information, see "Volume Pools" on page 338 and "Scratch Volume Pools" on page 340.

The following topics explain volume pool configuration:

- "Adding a New Volume Pool or Scratch Volume Pool" on page 119

- "Changing the Attributes of a Volume Pool" on page 121
- "Changing the Volume Pool Assignment for a Volume" on page 122
- "Deleting a Volume Pool" on page 123

Adding a New Volume Pool or Scratch Volume Pool

▼ To add a volume pool

1. In the NetBackup Administration Console, click **Media and Device Management** > **Media**.

2. Click **Actions** > **New** > **Volume Pool**.

   To add a scratch volume pool, see "Adding a Scratch Volume Pool" on page 120.

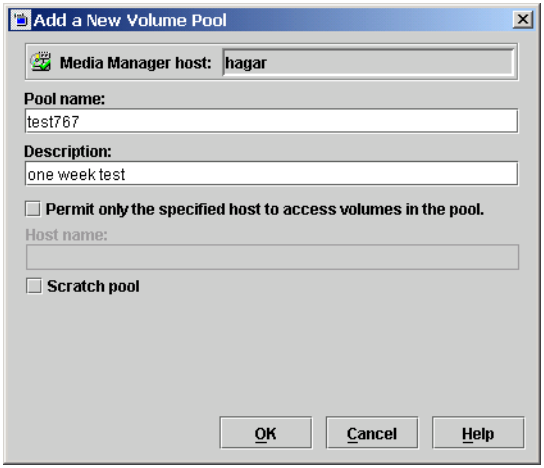

3. In the **Pool name** text box, enter a name for the new volume pool.

   The name must be 20 characters or less, and cannot contain any spaces or special characters. See "Allowable Media Manager Characters" on page 115.

4. In the **Description** text box, enter a brief description for the pool.

5. *This step applies only to NetBackup Enterprise Server.*

   To allow only a specified host to use the volumes in this pool, do the following:

a. Select **Permit only the specified host to access volumes in the pool**.

b. In the **Host name** text box, enter the name of the host that is allowed to request and use the volumes in this volume pool.

Caution VERITAS recommends that you *do not* specify a specific host. Allowing any host (the default) is recommended, and is required if you have NetBackup media servers (or SAN media servers) controlled by a master server. Never specify the name of a client.

Adding a Scratch Volume Pool

A scratch pool is a special volume pool that you can optionally configure. There can be only one scratch pool configured. You can not add a scratch pool if one exists.

If a scratch pool is configured, Media Manager moves volumes from the scratch pool to any other pools that do not have volumes available. Media Manager also returns any expired media back to the scratch volume pool automatically.

▼ To add a scratch volume pool

1. Specify attributes for the scratch pool as shown in the following table:

For this Attribute	Your Action	Note
Pool Name	Enter any name, except the following pool names: NetBackup, DataStore, or None. It is recommended to use a descriptive name, like scratchpool, as the pool name.	
Description	It is recommended to include “scratch pool” in the description.	
Permit only the specified host to access volumes in the pool	Do not select this check box to specify a specific host. ANYHOST is the default host name.	Applies only to NetBackup Enterprise Server.
Scratch Pool	Select this check box.	

2. Add volumes to the scratch volume pool for each robotic or standalone device that may require them.

Follow the steps for adding other volumes to pools (see "Adding New Volumes" on page 128). In this case, select the pool name of the scratch pool you created as the volume pool.

Changing the Attributes of a Volume Pool

▼ To change a volume pool

1. In the NetBackup Administration Console, click **Media and Device Management** > **Media** > **Volume Pools**.

2. Select a pool from the pools shown under **Volume Pools** in the tree pane.

3. Click **Edit** > **Change**.

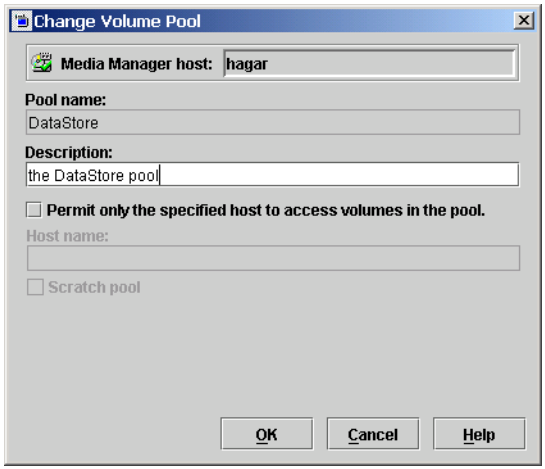

4. In the **Description** text box, enter a new description for the pool.

   To change this pool to a scratch volume pool, see "Changing a Volume Pool To be a Scratch Volume Pool" on page 122.

5. *This step applies only to NetBackup Enterprise Server.*

   To allow only a specified host to use the volumes in this pool:

   a. Select **Permit only the specified host to access volumes in the pool**.

   b. In the **Host name** text box, enter the name of the host that is allowed to request and use the volumes in this volume pool.

Caution VERITAS recommends that you *do not* specify a specific host. Allowing any host (the default) is recommended, and is required if you have NetBackup media servers (or SAN media servers) controlled by a master server. Never specify the name of a client.

Changing a Volume Pool To be a Scratch Volume Pool

A scratch pool is a special volume pool that you can optionally configure. There can be only one scratch pool configured. You can not add a scratch pool if one exists.

If a scratch pool is configured, Media Manager moves volumes from the scratch pool to any other pools that do not have volumes available. Media Manager also returns any expired media back to the scratch volume pool automatically.

▼ **To change a pool to be a scratch volume pool**

1. Specify attributes for the scratch pool as follows.

For this Attribute	Your Action	Note
Description	It is recommended to include “scratch pool” in the description.	
Permit only the specified host to access volumes in the pool	Do not select this check box to specify a specific host. ANYHOST is the default host name.	Applies only to NetBackup Enterprise Server.
Scratch Pool	Select this check box.	

2. Add volumes to the scratch volume pool for each robotic or standalone device that may require them.

   Follow the steps for adding other volumes to pools (see “Adding New Volumes” on page 128). In this case, select the name of the scratch pool as the volume pool.

Changing the Volume Pool Assignment for a Volume

Volumes are grouped in a specific volume pool. The Volume Pool column in the Volumes list shows the name of the volume pool to which the volumes belong. Volume Pool does not apply to cleaning tapes.

▼ To change the volume pool assignment

1. In the NetBackup Administration Console, click **Media and Device Management** > **Media**.

2. Select a volume or volumes from the volumes pane.

Note You are unable to change the volume pool for any assigned volumes until the application deassigns them (see "Deassigning Volumes" on page 153).

3. Click **Edit** > **Change**.

   In the dialog that appears, the volumes you selected in the previous step are listed in the top section of the dialog.

   See "Changing the Attributes for a Volume" on page 155 for more information.

4. In the Volume Pool section, click **New Pool** and click the **arrow** to view a list of the available volume pools.

   Select a volume pool from the list.

5. Click **OK**.

Deleting a Volume Pool

Note that you *cannot* delete any of the following pools:

- A volume pool that contains volumes
- Scratch pools
- The NetBackup volume pool
- The None volume pool
- The HSM volume pool (for VERITAS Storage Migrator)
- The DataStore volume pool

▼ To delete a volume pool

1. In the NetBackup Administration Console, click **Media and Device Management** > **Media** > **Volume Pools**.

2. Select a volume pool from the pools shown under **Volume Pools** in the tree pane.

Ensure that the volume pool is empty. If the pool is not empty, change the pool name for any volumes in the pool. If the volumes are not needed, delete them.

3. Click **Edit** > **Delete**.

   Answer the confirmation dialog.

Methods Available for Injecting and Ejecting Volumes

Some robotic libraries implement different functionality for their media access ports. For example, some libraries have front-panel inject and eject features that conflict with the use of the media access port in NetBackup. Other robotic libraries require front-panel interaction when using the media access port.

Read the operator manual for your robotic library to understand the media access port functionality. Libraries such as the ones noted may not be fully compatible with the inject and eject features of NetBackup if not properly handled. Other libraries may not be compatible at all.

See the following topics for more information:

- "Methods for Injecting Volumes into a Robot" on page 124
- "Methods for Ejecting Volumes From a Robot" on page 126
- "Inject and Eject Functions Available by Robot Type" on page 127
- "Media Ejection Timeout Periods" on page 128

Methods for Injecting Volumes into a Robot

The following methods are available to inject a single volume into a robotic library.

When Adding New Volumes

When specifying dialog entries for adding new volumes, select **Inject volume into robot via the media access port** to inject a volume into a robotic library.

Inject volume into robot via the media access port is available only for the robot types listed in the matrix shown in "Inject and Eject Functions Available by Robot Type" on page 127.

Inject volume into robot via the media access port *may* be enabled for some robots that do not have media access ports, since the robot type for the robotic library only indicates that media access ports are possible.

See "Adding Volumes Using the Actions Menu" on page 132 for complete instructions.

When Moving Volumes

When specifying dialog entries for moving volumes, select **Inject volume into robot via the media access port** to inject this volume into a robotic library.

Inject volume into robot via the media access port is available only if the following are true:

- You are moving a single volume from standalone to a robotic library.
- Media Manager supports inject for the robot type involved (see "Inject and Eject Functions Available by Robot Type" on page 127).

Inject volume into robot via the media access port *may* be enabled for some robots that do not have media access ports, since the robot type for the robot only indicates that media access ports are possible.

See "Moving Volumes" on page 141 for complete instructions.

When Performing a Volume Configuration Update Using Robot Inventory

When performing a volume configuration update for a robot, select **Empty media access port prior to update** to inject a volume into a robot.

Any volumes to be injected must be in the media access port before the operation begins. If **Empty media access port prior to update** is selected and there are no volumes in the port, you are *not* prompted to place volumes in the media access port and the update operation continues.

Each volume located in the media access port is moved into the robotic library. If the robotic library has a port that can hold multiple volumes, volumes are moved to empty slots in the robotic library until the media access port is empty or all the slots are full.

After the volume or volumes have been moved, the configuration update proceeds as usual.

Empty media access port prior to update is available only for the robot types listed in the matrix shown in "Inject and Eject Functions Available by Robot Type" on page 127.

Empty media access port prior to update *may* be available for some robots that do not have media access ports, since these robot types only indicate that media access ports are possible.

See "Updating the Volume Configuration for a Robot" on page 174 for complete instructions.

Methods for Ejecting Volumes From a Robot

The following methods are available to eject single or multiple volumes.

When Moving Volumes

When specifying dialog entries for moving volumes, select **Eject volume from robot via the media access port** to eject a single selected volume using the robot's media access port.

Eject volume from robot via the media access port is available only if the following are true:

- You are moving a volume from a robotic library to standalone.
- Media Manager supports eject for the robot type involved (see "Inject and Eject Functions Available by Robot Type" on page 127).

Eject volume from robot via the media access port *may* be enabled for some robots that do not have media access ports, since the robot type for the robotic library only indicates that media access ports are possible.

See "Moving Volumes" on page 141 for complete instructions.

Using the Eject Volumes From Robot Command

Select **Actions** > **Eject Volume(s) From Robot** to eject one or more selected volumes from a robotic library.

Eject Volume(s) From Robot is only available for the robot types shown in the matrix in "Inject and Eject Functions Available by Robot Type" on page 127.

You cannot eject volumes that reside in multiple robots.

For the robot types shown in the 4th column of the following matrix, operator intervention is only required if the robotic library does not have a media access port large enough to eject all of the selected volumes. For these robot types, the operator is prompted to remove the media from the media access port so the eject can continue with the remaining volumes. See "Media Ejection Timeout Periods" on page 128.

See "Ejecting Volumes From Robots (Actions Menu Command)" on page 149 for complete instructions.

Inject and Eject Functions Available by Robot Type

The following matrixes show the availability of inject and eject functions provided with the Media Manager functions listed in the 1st column. The availability of the inject and eject functions listed in the column headings depends on the robot type being used. NA in a cell of a matrix means *Not Applicable*.

The following matrix applies to NetBackup Server. For RSM robot types the robot must be attached to a server running a Windows operating system that supports RSM and is running NetBackup.

Inject / Eject Functions Available for NetBackup Server Robot Types

Media Manager Function	Inject Single Volume	Eject Single Volume	Eject Single or Multiple Volumes
New Volumes	ODL, RSM, TL8, TLD, TSH	NA	NA
Move Volumes	ODL, TL8, TLD, TSH	TL8, TLD, TSH	NA
Robot Inventory	TL8, TLD	NA	NA
Eject Volumes	NA	NA	TL8, TLD

The following matrix applies to NetBackup Enterprise Server. For RSM robot types the robot must be attached to a server running a Windows operating system that supports RSM and is running NetBackup.

Inject / Eject Functions Available for NetBackup Enterprise Server Robot Types

Media Manager Function	Inject Single Volume	Eject Single Volume	Eject Single or Multiple Volumes
New Volumes	LMF, ODL, RSM, TL8, TLD, TSH	NA	NA
Move Volumes	LMF, ODL, TL8, TLD, TSH	LMF, TL8, TLD, TSH	NA
Robot Inventory	TL8, TLD, TLM	NA	NA
Eject Volumes	NA	NA	ACS, TL8, TLD, TLH, TLM

Media Ejection Timeout Periods

The media ejection period (the amount of time before an error condition occurs) varies depending on the capability of each robot. The following table shows the ejection timeout periods for robots.

Robot Types	Timeout Period	Note
Automated Cartridge System (ACS) Tape Library Multimedia (TLM)	One week	Applies only to NetBackup Enterprise Server.
Tape Library 8MM (TL8) Tape Library DLT (TLD)	30 minutes.	
Tape Library Half-inch (TLH)	None. The robot allows an unlimited period to remove media.	Applies only to NetBackup Enterprise Server.

Caution If media is not removed and a timeout condition occurs, the media is returned to (injected into) the robot. If this occurs, you should inventory the robot and then eject the media that was returned to the robot.

Some robots do not have media access ports. For these robots, the operator must remove the volumes from the robot manually.

Note After manually adding or removing volumes, it is recommended to run an inventory on the robot.

Adding New Volumes

Media Manager volumes are logical units of data storage or cleaning capability on media that have been assigned media IDs and other attributes, which are recorded in the Media Manager volume database. The attributes in the volume database include information to show the robotic location. This residence information for a volume includes the robot host, robot type, robot number, and slot location.

When you add a new volume, there is no default expiration date. See the following topics:

- "Methods Available for Adding Volumes" on page 129
- "Adding Volumes Using a Robot Inventory Update" on page 131
- "Adding Volumes Using the Actions Menu" on page 132

◆ "Dialog Entries for New Volumes" on page 134

Methods Available for Adding Volumes

The methods available to add volumes depend on how the volume will be used.

If your storage devices are supported by the Volume Configuration wizard, using this wizard is an easy method for adding volumes. See "Using the Volume Configuration Wizard" on page 140 for more details.

See the following topics:

◆ "Robotic Volumes (Volumes Located in a Robot)" on page 129

◆ "Standalone Volumes (Volumes To Be Used in Standalone Drives)" on page 129

◆ "NetBackup Catalog Backup Volumes" on page 130

◆ "Notes on Labeling NetBackup Volumes" on page 130

Robotic Volumes (Volumes Located in a Robot)

- The easiest way to add robotic volumes is to use the Volume Configuration wizard. See "Using the Volume Configuration Wizard" on page 140 for more details.
- To use robot inventory to add robotic volumes, perform the Update Volume Configuration procedure. During the update, Media Manager assigns the media IDs and other attributes.

  See "Adding Volumes Using a Robot Inventory Update" on page 131.
- To add volumes using the menu, see "Adding Volumes Using the Actions Menu" on page 132.

Standalone Volumes (Volumes To Be Used in Standalone Drives)

- The easiest way to add standalone volumes is to use the Volume Configuration wizard. See "Using the Volume Configuration Wizard" on page 140 for more details.
- You can also configure volumes automatically by inserting the media into a standalone drive. For an unused volume, NetBackup assigns a media ID, labels the volume, and uses it (if it needs a volume of that type for a backup). Media Manager adds the media ID (designated by NetBackup) and other attributes for the volume.

  The `DISABLE_STANDALONE_DRIVE_EXTENSIONS` configuration option turns off NetBackup's automatic use of standalone volumes. See the NetBackup system administrator's guide for more information.

- To manually choose the media IDs, label the volume with the NetBackup `bplabel` command and then follow the instructions in "Adding Volumes Using the Actions Menu" on page 132. See the NetBackup commands guide for more information on this command.

  Even if you normally use NetBackup's assignment capabilities for standalone volumes, manually adding extra standalone volumes prevents "out of media" errors in some situations.

  For example, if a volume in a standalone drive is full or unusable because of errors, NetBackup requests that Media Manager eject the volume. NetBackup then searches for another unused volume. If another appropriate volume is not defined, NetBackup exits with an error.

  Labeling a volume and adding it prevents this problem, because Media Manager displays a mount request for that volume rather than returning an error to NetBackup.

NetBackup Catalog Backup Volumes

- Prior to using volumes for NetBackup catalog backups, you must add them. You can also use the NetBackup `bplabel` command to label the volume.

  See "Adding Volumes Using the Actions Menu" on page 132.

Notes on Labeling NetBackup Volumes

Labeling volumes is controlled by the application. Refer to the NetBackup system administrator's guide for Windows servers, the NetBackup system administrator's guide for UNIX, or the Storage Migrator system administrator's guide for more information.

NetBackup controls the labeling of its volumes and in most cases performs this operation automatically.

- If a volume in a robotic library has not been labeled, NetBackup labels it with the media ID assigned by Media Manager the first time that it uses the volumes for a backup.

  This action is done unless those volumes were last used for NetBackup catalog backups (you do not want to label these volumes unless they are no longer being used for catalog backups), or the volumes contain data from a recognized non-NetBackup application (the NetBackup configuration option, `ALLOW_MEDIA_OVERWRITE` can be set to allow the volume to be overwritten).

- If you prefer to assign specific media IDs to NetBackup volumes, label them using the NetBackup `bplabel` command and add them using the manual update procedure.

- Media Manager uses a default prefix of the letter A, when assigning media IDs to volumes without barcodes (for example, A00001). To change this default, use the `MEDIA_ID_PREFIX` configuration option.
- If the robotic library supports barcodes, by default NetBackup generates media IDs for new volumes based on the last six characters of the barcode obtained from the robot. To change this default action, you can specify and select specific characters using Media ID generation rules (see "Media ID Generation Tab (Advanced Options)" on page 197).
- An optical disk platter must be formatted, have an external media ID, and a volume label before you can use it with Media Manager. Use the NetBackup **Media** interface, `vmadm`, or `vmadm` with the `tpformat` command to add an optical disk volume. When using the NetBackup **Media** interface or `vmadm`, you can choose the label option, making it unnecessary to use `tpformat` from the command line.

  See "Label Optical Media" on page 140, "Using the Media Management Utility (vmadm)" on page 413, or the `tpformat(1M)` command page for more information.

Adding Volumes Using a Robot Inventory Update

The update includes the generation of media IDs for new volumes as follows.

If the robot

- Supports barcodes and the volumes have readable barcode labels, the update part of the operation generates Media Manager media IDs for new volumes based on the last six characters of the barcodes (as the default method) or the specific characters that you specify if you are using Media ID generation rules.
- Does not support barcodes or the volumes do not have readable barcodes, the new media IDs are based on a media ID prefix that you specify.

  See "Updating the Volume Configuration for a Robot" on page 174 for more information on robot inventory and media ID generation rules.

When you use barcode rules, new volumes that are added through a barcode rule are assigned a media type, volume pool, maximum number of mounts (or maximum cleanings), and description.

▼ To add volumes using a robot inventory update

1. Insert the volume into the robotic library.
2. In the NetBackup Administration Console, click **Media and Device Management** > **Media** > **Robots**.
3. Select the robotic library where you inserted the volume.

4. Click **Actions** > **Inventory Robot**.

5. In the Inventory operation section, select **Update volume configuration**.

6. For more options, click **Advanced Options ...**.

7. To clear any previous display in the Results section, click **Clear Results**.

8. Click **Start** to start the update.

Adding Volumes Using the Actions Menu

This is not the recommended method to add volumes. See "Adding Volumes Using a Robot Inventory Update" on page 131.

▼ To add volumes using the Actions menu

1. If you are adding new volumes to a robotic library, insert them into the proper slots.

2. In the NetBackup Administration Console, click **Media and Device Management** > **Media**.

3. *This step applies only to NetBackup Enterprise Server.*

   Verify that you are adding volumes on the volume database host for the robotic library or a standalone device that will be using the new volumes.

   See "Determining the Volume Database Host for a Device" on page 116.

4. Click **Actions** > **New** > **Volumes**.

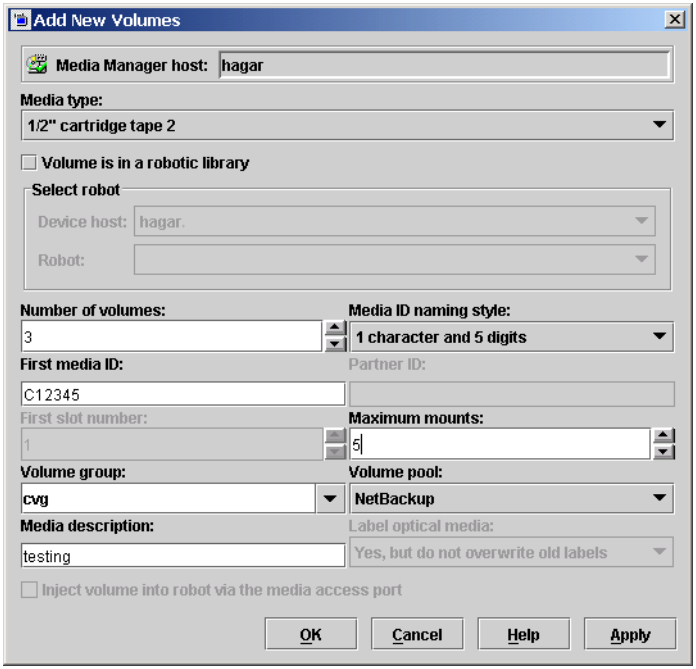

5. Specify the properties for the volumes as explained in "Dialog Entries for New Volumes" on page 134.

Note Be careful when specifying properties, since you cannot change properties (such as the media ID or media type) later. To change these properties, you need to delete the volumes and add them again.

6. Click **OK** to execute the add. If you selected **Inject volume into robot via the media access port**, an inject prompt appears.

   The volumes pane now shows the new volume information. If the robot has a barcode reader, Media Manager does the following actions:

   a. Adds an entry in the volume database, using the specified media ID.

   b. Reads the barcode of each new volume.

   c. Adds the barcodes as attributes in the volume database.

Note If you are making multiple additions, clicking **Apply** updates the configuration without closing the dialog or refreshing the display. This allows you to add another volume by modifying the dialog contents and then clicking **Apply** or **OK**.

Dialog Entries for New Volumes

- "Media Type" on page 134
- "Volume Is In a Robotic Library" on page 135
- "Select Robot Section of the Dialog" on page 135
- "Device Host" on page 135
- "Robot" on page 135
- "Number of Volumes (or Number of platters)" on page 135
- "Media ID Naming Style" on page 136
- "Media ID or First Media ID" on page 136
- "Partner ID" on page 137
- "Media Description" on page 137
- "First Slot Number" on page 137
- "Maximum Mounts or Maximum Cleanings" on page 138
- "Volume Group" on page 138
- "Volume Pool" on page 139
- "Label Optical Media" on page 140
- "Inject Volume Into Robot via the Media Access Port" on page 140

Media Type

Media Manager running on a Windows host does not support optical disk volumes.

Media Type specifies the media type for the volume that you are going to add.

▼ To specify a media type

❖ Click the **arrow** and select from the list.

If you are adding a cleaning tape, choose one of the cleaning tape media types.

Volume Is In a Robotic Library

▼ **To specify that the volume is in a robot**

❖ Select **Volume is in a robotic library**.

The **Select robot** section of the dialog is then available.

Select Robot Section of the Dialog

Device Host

Specifies the name of the device host where the robot is defined.

The following procedure applies only to NetBackup Enterprise Server.

▼ **To select a robot on another device host**

❖ Click the **arrow** and select from the list of hosts shown.

Robot

Robot specifies the robotic library to which you are adding the volumes. You can specify a different robot.

▼ **To add volumes to a different robot**

❖ Click the **arrow** and select one of the robots in the list.

The list shows robots on the selected host that can contain volumes of the selected media type.

Number of Volumes (or Number of platters)

Specifies the number of volumes you are adding. For a robotic library, this refers to the number of slots that must be reserved for the new volumes. Depending on the number of volumes you are adding, you must also specify additional information as shown in the following table:

If You are Adding	You Must Also Specify	See
One volume	**Media ID**	"Media ID or First Media ID" on page 136

If You are Adding	You Must Also Specify	See
More than one volume	**First Media ID** **Media ID naming style**	"Media ID or First Media ID" on page 136 "Media ID Naming Style" on page 136

Depending on the number of platters you are adding, you must also specify additional information as shown in the following table:

If You Are Adding	You Must Also Specify	See
One platter	**Media ID** **Partner ID**	"Media ID or First Media ID" on page 136 "Partner ID" on page 137
More than one platter	**First Media ID** **Media ID naming style**	"Media ID or First Media ID" on page 136 "Media ID Naming Style" on page 136

▼ **To specify the number of volumes (or platters)**

❖ Click an **arrow** and select a number for the volumes.

If you are adding optical volumes, specify the number of platters.

Media ID Naming Style

Media IDs can be from 1 to 6 characters in length.

Media Manager media IDs for an API robot must match the barcode on the media (for API robots, Media Manager supports barcodes from 1 to 6 characters). This means that you must get a list of the barcodes prior to adding the volumes. You can obtain this information through a robotic inventory or from the robot vendor's software.

▼ **To specify a naming style**

1. Click the **arrow** to open a list of possible combinations of alphanumeric characters.
2. Select a style to use in creating the media IDs for this range of new volumes.

   If you are adding optical volumes, there are style choices for naming platters.

Media ID or First Media ID

Media IDs can be from 1 to 6 characters in length.

Media Manager media IDs for an API robot must always match the barcode on the media (for API robots, Media Manager supports barcodes from 1 to 6 characters). This means that you must get a list of the barcodes prior to adding the volumes. You can obtain this information through a robotic inventory or from the robot vendor's software.

To specify a media ID for one volume

❖ Enter an ID for the new volume in the **Media ID** text box.

To specify media IDs for more than one volume

❖ Enter an ID for the new volumes in the **First Media ID** text box.

Use the same pattern that you chose in the **Media ID naming style** box. This is the ID for the first volume in the range of volumes that you are adding. Media Manager names the remaining volumes by incrementing the digits.

Partner ID

If you are adding one optical volume, you can specify a partner ID. This ID is the media ID of the volume on the other side of the optical platter.

▼ **To specify a partner ID**

❖ Enter a 1 to 6-character ID for the partner ID.

Media Description

Enter a 1 to 25 ASCII character description of the media that you are adding.

First Slot Number

For new volumes in a robot, you must specify the first slot number to be used by the range of volumes that you are adding. Media Manager assigns the remainder of the slot numbers sequentially.

Note You cannot enter slot information for volumes in an API robot. The robot vendor or the operating system software (in the case of RSM robots) tracks the slot locations for these robot types.

▼ **To specify the first slot number**

❖ Click an **arrow** and specify the first slot number.

Maximum Mounts or Maximum Cleanings

For volumes intended for backups, you specify the maximum number of times that Media Manager should mount the volumes. When a volume reaches this mount limit, the volume can be read, but not written.

For a cleaning tape, you specify the number of cleanings that can be performed. The number must be greater than zero.

See "Drive Cleaning" on page 332 for background information on manual cleaning and cleaning tapes.

▼ To specify maximum mounts

1. To help determine the maximum mount limit to use, consult your vendor documentation for information on the expected life of the volume.
2. Click an **arrow** and specify the maximum mounts.

Note Specify zero to permit an unlimited number of mounts.

▼ To specify maximum cleanings

❖ Click an **arrow** and specify the number of cleanings

Note The number that you specify must be greater than zero.

Volume Group

Volume groups are not the same as volume pools. Refer to "Volume Pools and Volume Groups" on page 337 for an explanation of the differences.

The following table shows the results if you do not specify a volume group (you leave the volume group blank):

If You Leave the Volume Group Blank for	Media Manager
Standalone volumes	Does not assign a volume group.
Robotic volumes	Generates a name using the robot number and type. For example, if the robot is a TS8 and has a robot number of 50, the group name will be 00_050_TS8.

Rules for Assigning Volume Groups

- All volumes in a group must be the same media type. However, a media type and its corresponding cleaning media type are allowed in the same volume group (for example, DLT and DLT_CLN).
- All volumes in a robotic library *must* belong to a volume group. You cannot add volumes to a robotic library without specifying a group or having Media Manager generate a name.
- The only way to clear a volume group name is to move the volume to standalone and not specify a volume group.
- More than one volume group can share the same location. For example, a robotic library can contain volumes from more than one volume group and you can have more than one standalone volume group.
- All members of a group must be in the same robotic library or be standalone. That is, Media Manager will not let you add a group (or part of a group) to a robotic library, if it already exists in another robotic library.

▼ To enter a volume group

❖ Enter a name for the volume group in the box.

▼ To select a volume group

❖ Click the **arrow** and select from the list of previously configured volume groups.

Volume Pool

▼ To select a volume pool

❖ Click the **arrow** and select from the list of volume pools as follows.

Select	To Make the Volume Available
None	To any user or application (Note: cleaning tapes must be in the None pool).
NetBackup	Only to NetBackup.
DataStore	Only to DataStore.

Select	To Make the Volume Available
One of the other volume pools in the list	For a specific volume pool. (Other volume pools appear only if you created them earlier as explained in "Configuring Volume Pools" on page 118.)

Label Optical Media

Before using optical volumes for backups, they must be formatted and labeled.

▼ **To label optical media**

❖ Click the **arrow** a and select one of the three choices for how you want the media labeled (**Yes, but do not overwrite old labels - Yes, overwrite as needed - No**).

Click the **arrow** to select from the list of available choices. The default choice does not overwrite any old labels.

Note The media is labeled but is not formatted.

Inject Volume Into Robot via the Media Access Port

See "Methods for Injecting Volumes into a Robot" on page 124 for a list of the robot types that determine when **Inject volume into robot via the media access port** is available, and for more information on using this function.

▼ **To insert a single volume into the media access port**

1. Select **Inject volume into robot via the media access port**.
2. Insert the volume in the robotic library so it can be injected into the correct slot in the robot. Media Manager will add it to its volume configuration.

Using the Volume Configuration Wizard

You can use this wizard to accomplish the following tasks:

- Inventory your robots.
- Identify cleaning media in your robots.
- Add volumes for standalone drives.
- Update the Media Manager volume database.

After running this wizard to configure media, each media will have a unique media ID in the volume database that is used in Media Manager and NetBackup to track the media. The wizard will create media that has a media type determined by type of drive. The default media type for the drive will be used.

Learning More About the Volume Configuration Wizard

You can obtain detailed information about this wizard before you start, including what to expect in the wizard, a wizard overview, and limitations of the wizard.

▼ **To learn about this wizard**

1. Start the wizard (see "Starting the Volume Configuration Wizard" on page 141).
2. From the welcome screen of the wizard, click **Help**.
3. When finished reviewing the help information in the wizard, exit the help and then click **Cancel** to exit the wizard.

Starting the Volume Configuration Wizard

This wizard is available from the list of wizards displayed in the right pane of the **Media and Device Management** window of the NetBackup Administration Console or from the Getting Started wizard.

Be sure to review the limitations of this wizard before starting.

▼ **To start the volume configuration wizard**

❖ In the NetBackup Administration Console, click **Media and Device Management** > **Configure Volumes**.

Moving Volumes

When you move volumes in or out of a robotic library, you must physically *and* logically move the volume.

When moving volumes from one robotic library to another robotic library, you must move the volumes to standalone as an intermediate step, and then to the new robotic library.

For background information, see "Moving Volumes" on page 342.

You can move volumes using one of the following methods:

- "Moving Volumes Using the Robot Inventory Update Option" on page 142
- "Moving Volumes Using the Actions Menu" on page 142

Moving Volumes Using the Robot Inventory Update Option

The robot must have a barcode reader and the volumes must have readable barcodes to use the following procedure. But you can also use this procedure to move volumes *out* of a robot, even if the volumes do not have barcodes or if the robot does not have a reader.

▼ To move volumes using a robot inventory update

1. Physically move the volumes to their new location.
2. Click **Actions** > **Inventory Robot** to update the volume database to agree with the contents of the robot.

   See "Updating the Volume Configuration for a Robot" on page 174 for more information.

Moving Volumes Using the Actions Menu

If you move a volume to a robotic library that has a barcode reader, Media Manager updates the media database to show the correct barcode for the volume.

When moving volumes from one robotic library to another, you must move the volumes to standalone as an intermediate step and then to the new robotic library.

▼ To move volumes using the Actions menu

1. Physically move the volumes to their new location.
2. In the NetBackup Administration Console, click **Media and Device Management** > **Media**.
3. In the volumes pane, select the volumes you want to move.

4. Click **Actions** > **Move**.

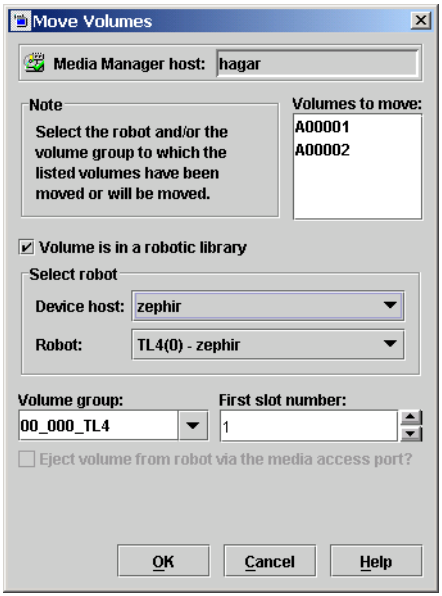

5. Specify the properties for the move as explained in "Dialog Entries for Move Volumes" on page 143.

Note If you are moving a single volume, the dialog entries are set to show the current location of the volume.

6. Click **OK** to execute the move.

   If you selected **Eject volume from robot via the media access port**, an eject dialog appears. See "Ejecting Volumes From Robots (Actions Menu Command)" on page 149 for more information on the eject dialogs.

Dialog Entries for Move Volumes

- "Volumes to Move" on page 144
- "Volume Is In a Robotic Library" on page 144
- "Select Robot Section of the Dialog" on page 145
- "Device Host" on page 145
- "Robot" on page 145
- "Volume Group" on page 145

- "First Slot Number" on page 146
- "Eject Volume From Robot via the Media Access Port" on page 146
- "Inject Volume Into Robot via the Media Access Port" on page 147

Volumes to Move

The **Volumes to Move** section of the dialog shows the Media IDs of the volumes that you selected to move.

If you selected only one side of an optical disk platter that side is shown, but both sides will be moved.

Volume Is In a Robotic Library

▼ To inject a volume into a robotic library

❖ Select **Volume is in a robotic library**.

The **Select robot** section of the dialog is now available. Specify the robot (see "Robot" on page 145) and the slot number for the volume (see "First Slot Number" on page 146).

▼ To update the volume database for a volume that has been injected into the robotic library

❖ Select **Volume is in a robotic library**.

The **Select robot** section of the dialog is now available. Specify the robot (see "Robot" on page 145) and the slot number for the volume (see "First Slot Number" on page 146).

▼ To eject a volume from a robot

❖ Clear **Volume is in a robotic library**

▼ To update the volume database for a volume that has been ejected into the robotic library

❖ Clear **Volume is in a robotic library**

Select Robot Section of the Dialog

If you are moving a single volume, the **Select robot** section initially shows the current location of the volume.

Device Host

Specifies the name of the device host where the robot is defined.

The following procedure applies only to NetBackup Enterprise Server.

▼ To select a robot on another device host

❖ Click the **arrow** and select from the list of device hosts shown.

Robot

Robot specifies the robotic library where you are moving the volumes. You can speicify a different robot.

▼ To specify a different robot

❖ Click the **arrow** and select from the list to specify the robot to which you are moving the volumes.

The list shows robots on the selected device host that can contain volumes of the selected media type.

Volume Group

The following table shows the results if you do not specify a volume group (you leave the volume group blank):

If you Leave Volume Group Blank for	Media Manager
Standalone volumes	Does not assign a volume group.
Robotic volumes	Generates a volume group name by using the robot number and type. For example, if the robot is a TS8 and has a robot number of 50, the group name will be 00_050_TS8.

Rules for Moving Volumes Between Groups

- You must move volumes to a new volume group or to an existing volume group that has the same type of volumes as you are moving.
- All volumes in a robotic library *must* belong to a volume group. You cannot move volumes into a robotic library without specifying a group or having Media Manager generate a volume group name.
- More than one volume group can share the same location. For example, a robotic library can contain volumes from more than one volume group and you can have more than one standalone volume group.
- All members of a group must be in the same robotic library or be standalone. That is, Media Manager will not let you add a group (or part of a group) to a robotic library, if it already exists in another robotic library.

▼ **To enter a volume group**

❖ Enter the name of the volume group for the volumes that you are moving.

▼ **To select a volume group**

❖ Click the **arrow** and select from the list of previously configured volume groups.

First Slot Number

For volumes in a robotic library, specify the first slot number to be used in the destination robotic library. By default, this box shows the slot number that the volume is coming from. Media Manager assigns the remainder of the slot numbers sequentially.

Note You cannot enter slot information for volumes in an API robot. The robot vendor or the operating system software (in the case of RSM robots) tracks the slot locations for these robot types.

▼ **To specify the first slot number**

❖ Click an **arrow** and specify the number.

Eject Volume From Robot via the Media Access Port

See "Methods for Ejecting Volumes From a Robot" on page 126 for a list of the robot types and the cases that determine when **Eject volume from robot via the media access port** is available, and for more information on using this function.

▼ **To eject a single volume using the media access port**

❖ Select **Eject volume from robot via the media access port**.

Inject Volume Into Robot via the Media Access Port

See "Methods for Injecting Volumes into a Robot" on page 124 for a list of the robot types and the cases that determine when **Inject volume into robot via the media access port** is available, and for more information on using this function.

▼ **To insert a single volume using the media access port**

❖ Select **Inject volume into robot via the media access port**.

The robotic library will move the volume to the correct slot.

When to Delete Volumes

There may be times when you want to delete volumes, for example if any of the following situations apply. The volume is

- No longer used and you want to recycle it by relabeling it with a different media ID.
- Unusable because of repeated media errors.
- Past its expiration date or has too many mounts, and you want to replace it with a new volume.
- Lost and you want to clean up the volume database.

Once a volume is deleted, you can discard it or add it back under the same or a different media ID.

Before deleting and reusing, or discarding a volume, ensure that it does not have any important data. NetBackup and Storage Migrator volumes have an extra safeguard against accidental deletion. Volumes assigned to either of these applications cannot be deleted while they are still assigned. See "Deassigning Volumes" on page 153.

Deleting Volumes

▼ To delete volumes

1. In the NetBackup Administration Console, click **Media and Device Management** > **Media**.

2. In the volumes pane select the volumes that you want to delete.

Note You cannot delete any assigned volumes until any application using them deassigns them.

3. Click **Edit** > **Delete**.

   A dialog appears asking you to confirm the action.

Note If you selected only one side of an optical platter, the volume on other side is also deleted.

4. Remove the deleted volumes from the storage device.

Deleting a Volume Group

▼ To delete volume groups

1. In the NetBackup Administration Console, click **Media and Device Management** > **Media**.

2. In the volumes list, look at the Time Assigned column to check if any of the volumes in the group you want to delete are currently assigned.

   The Time Assigned column is hidden by default. To display this column, see "Customizing the Window" on page 115.

   If any of the volumes are assigned, you cannot delete the group until these volumes are deassigned by the application (see "Deassigning Volumes" on page 153).

   Use the procedure ("Deleting Volumes" on page 148) to delete individual volumes that are unassigned.

3. Select a volume group in the tree pane.

4. Click **Edit** > **Delete**.

A dialog appears asking you to confirm the action.

5. Remove the deleted volumes from the storage device.

Ejecting Volumes From Robots (Actions Menu Command)

You can eject single or multiple volumes. See "Methods for Ejecting Volumes From a Robot" on page 126 for a list of robot types that determine when this command is available and more information on using this command.

▼ To eject volumes

1. In the NetBackup Administration Console, click **Media and Device Management** > **Media**.

2. In the volumes pane, select one or more volumes that you want to eject.

3. Click **Actions** > **Eject Volume(s) From Robot**.

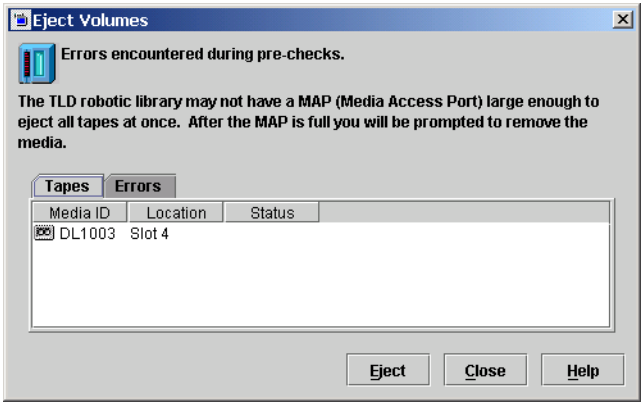

4. In normal cases after the pre-checks for the eject are complete, the **Tapes** tab shows the volumes that you selected to eject and the **Errors** tab is empty.

   The eject may not be possible because of an error or a hardware limitation. If an error occurs, the **Errors** tab is opened. The following two classes of errors can occur:

   - For more serious errors, **Eject** will not be available and the cause of the error must be corrected.
   - For other errors, the **Errors** tab shows an explanation of the error. You may continue the eject action (select **Eject**) or exit (select **Close**) depending on the type of error.

5. *The following step applies only to NetBackup Enterprise Server.*

   For ACS and TLM robot types only, you must select the media access port that will be used for the eject.

6. Click **Eject** to execute the eject.

   The robotic library may not have a media access port large enough to eject all of the selected volumes. For most robot types, you are prompted to remove the media from the media access port so the eject can continue with the remaining volumes.

Labeling Media

You can label new media or relabel used media. The media must be currently unassigned by NetBackup and have no valid NetBackup images on it.

Caution If you use this function, any data written on the media will no longer be available for a restore or import.

▼ To label or relabel media

1. In the NetBackup Administration Console, click **Media and Device Management** > **Media**.

2. In the volumes pane, select a volume or volumes that you want to label. If multiple volumes are selected, they must all have identical robot-residence information.

   The media must be currently unassigned by NetBackup and have no valid NetBackup images.

3. Click **Actions** > **Label**.

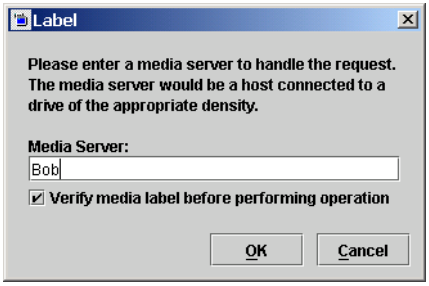

4. Specify the name of the media server where the drive is located that will receive the mount request for the volume.

If you want existing labels that are found on the media to be overwritten, do *not* select **Verify media label before performing operation**.

Click **OK**.

5. A dialog warning you that this action is irreversible appears.

   Click **OK**, if you are certain you want to start the labeling action.

6. A dialog reminding you to use the Activity Monitor to view the progress and status of the action appears. Click **OK**.

   If you selected **Verify media label before performing operation** in step 4 and the label found on the volume does not match the expected label of the volume that you specified in step 2, the media will not be relabeled. Use the Activity Monitor to view the status of the action.

Caution Canceling a label or relabel job from the Activity Monitor may not be possible for many types of drives.

Erasing Media Functions

You can do a quick (short) or long erase of used media. The media must be currently unassigned by NetBackup and have no valid NetBackup images on it. After the media is erased, a NetBackup media label is written on the media.

Note Media erase functions are not supported on NDMP drives.

Caution If you use this function, any data written on the media will no longer be available for a restore or import.

SCSI Quick Erase

If you select a quick (or short) erase, Media Manager will perform a SCSI Quick Erase. For a SCSI Quick Erase, the media is rewound and an erase gap is recorded on the media. The format of this gap is drive dependent, and can be an end-of-data (EOD) mark or a recorded pattern that is recognized by the drive as not being data.

Some drives do not support a quick erase, (for example QUANTUM DLT7000). For drives that do not support a quick erase, the new tape header that is written acts as an application-specific quick erase.

SCSI Long Erase

If you select a long erase, Media Manager will do a SCSI Long Erase. For this erase, the media is rewound and the data on the tape is overwritten with a known data pattern. A SCSI Long Erase is also called a secure erase, since it erases the recorded data completely.

Caution A long erase is a time-consuming operation and can take as long as 2 to 3 hours. For example, it takes about 45 minutes to erase a 4mm tape on a standalone drive

Erasing Media

▼ To erase media

1. In the NetBackup Administration Console, click **Media and Device Management** > **Media**.

2. In the volumes pane, select a volume or volumes that you want to erase. If multiple volumes are selected, they must all have identical robot-residence information.

   The media must be currently unassigned by NetBackup and have no valid NetBackup images.

3. For a short erase, click **Actions** > **Quick Erase**.

   For a long erase, click **Actions** > **Long Erase**.

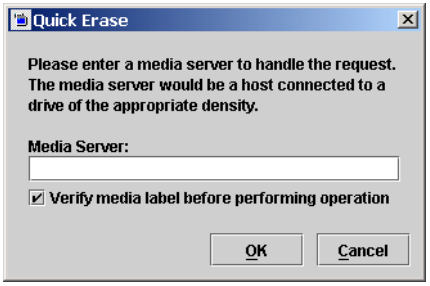

4. Specify the name of the media server where the drive is located that will receive the mount request for the volume.

   If you want existing labels that are found on the media to be overwritten, do *not* select **Verify media label before performing operation**.

   Click **OK**.

5. A dialog warning you that this action is irreversible appears. Click **OK** if you are certain you want to start the erase action.

6. A dialog reminding you to use the Activity Monitor to view the progress and status of the action appears. Click **OK**.

   If you selected **Verify media label before performing operation** in step 4 and the label found on the volume does not match the expected label of the volume that you specified in step 2, the media will not be erased. Use the Activity Monitor to view the status of the action.

Caution Canceling an erase job from the Activity Monitor may not be possible for many types of drives.

Deassigning Volumes

An assigned volume is currently assigned for exclusive use by NetBackup or Storage Migrator (but not both). A volume is set to the assigned state when either of these applications first starts using it to store data. The time of the assignment appears in the Time Assigned column for the volume in the volumes pane. When a volume is assigned, you cannot delete it or change its volume pool.

A volume remains assigned until the application deassigns it. NetBackup and Storage Migrator deassign a volume only when they no longer need the data.

In the case of a NetBackup volume:

- A regular backup volume is deassigned when the retention period has expired for all the backups on the volume.
- A catalog backup volume is deassigned when you stop using it for catalog backups.

Determining Which Application is Using a Volume

▼ **To determine which application is using the volume**

❖ Check the Status column of the Volumes list (see “Volumes Pane” on page 106).

Deassigning NetBackup Volumes

Caution It is recommended that you *do not* manually deassign NetBackup volumes. If you do, be certain that the volumes do not have any important data. If you are uncertain, copy the images to another volume.

The procedure is different depending on whether the volume is currently being used for regular backups or for backing up the NetBackup catalogs. See the following two topics for instructions.

Deassigning NetBackup Regular Backup Volumes

NetBackup deassigns a regular backup volume when the retention periods have expired for all backups on the volume. If you do not need the data and do not want to wait for normal expiration to occur, you can expire the backup by using the `bpexpdate` command on the master server.

This command is located in the `/usr/openv/netbackup/bin/admincmd` directory and has the following format:

`bpexpdate -d 0 -m` *media id* `[-host` *hname*`]`

media id is the media ID to be expired and *hname* is the name of the NetBackup media server (or SAN media server) that has the media ID (the server where media ID was written).

The following point applies only to NetBackup Enterprise Server.

Specify *hname* only if your configuration uses master servers and media servers.

The following example assumes there is only one NetBackup server and expires all the backups on media ID ABC001:

```
/usr/openv/netbackup/bin/admincmd/bpexpdate -d 0 -m ABC001
```

If you use this command to expire the volume, NetBackup stops tracking the backups that are on it and deassigns it. This makes the volume available to be reused, deleted, or its volume pool to be changed. You can manually expire the backups regardless of the volume's prior state (frozen, suspended, and so on).

Expiring the volume does not change anything on the volume itself. When a media is expired, however, you must use the NetBackup import feature before restoring the backups it contains (a restore is possible only if the volume has not been overwritten).

Deassigning NetBackup Catalog Backup Volumes

Volumes used for backing up the NetBackup catalogs are tracked separately from regular backup volumes.

To deassign these volumes (assuming they do not contain any important data), specify None or a different media ID for catalog backups. Then the media is available to be reassigned or deleted, or its volume pool can be changed.

See the NetBackup system administrator's guide for UNIX or the guide for Windows servers for more information.

Deassigning Storage Migrator Volumes

If a volume is assigned to Storage Migrator, you must wait for Storage Migrator to deassign them. Storage Migrator deassigns a volume when the images are no longer required. Attempting to manually deassign Storage Migrator volumes could result in loss of data. For more information on how Storage Migrator manages its volumes, see the Storage Migrator system administrator's guide for UNIX.

Changing the Attributes for a Volume

▼ **To change volume attributes**

1. In the NetBackup Administration Console, click **Media and Device Management** > **Media**.
2. In the volumes pane, select a volume or volumes.
3. Click **Edit** > **Change**.

A dialog appears and shows the media ID and other attributes for each selected volume.

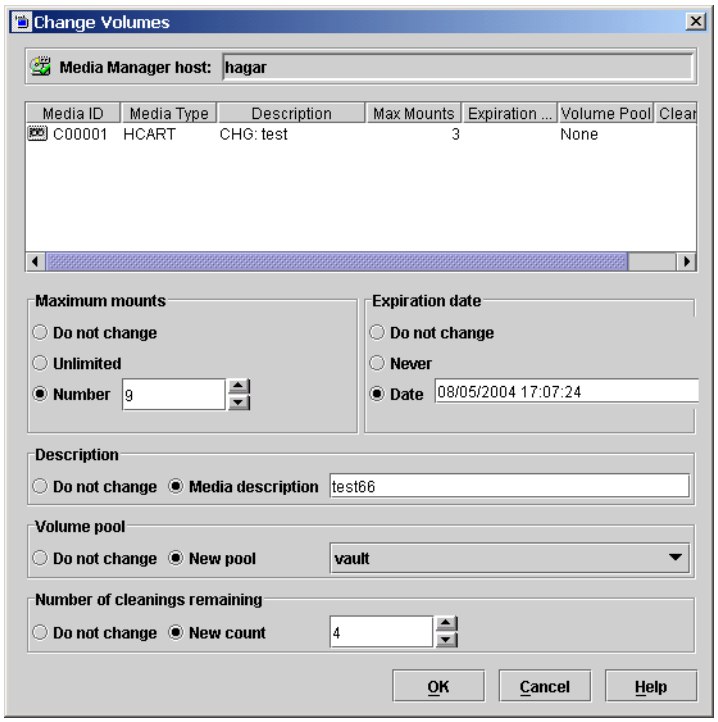

4. In the dialog, change the attributes for the volume as explained in "Dialog Entries for Change Volumes" on page 156.

5. Click **OK** to apply the changes to the selected volumes.

Dialog Entries for Change Volumes

- "Maximum Mounts" on page 157
- "Expiration Date" on page 157
- "Description" on page 158
- "Volume Pool" on page 158
- "Number of Cleanings Remaining" on page 159

Maximum Mounts

Maximum Mounts does not apply to cleaning tapes.

Controls the number of times that the selected volumes can be mounted. To help determine the maximum mount limit to use, consult your vendor documentation for information on the expected life of the volume.

▼ To not make any changes to Maximum mounts

❖ Select **Do not change**.

▼ To allow an unlimited number of mounts

❖ Select **Unlimited** (**Unlimited** is the default).

▼ To set a specific limit for the number of mounts

1. Click **Number**.
2. Enter a number or click an **arrow** to specify the number.

   When the limit is passed the volume can still be read, but it will not be mounted for a write.

   Specifying zero (the default) is the same as selecting **Unlimited**.

Expiration Date

Expiration Date does not apply to cleaning tapes.

You can change the expiration date for the selected volumes. This date refers to the age of the volume and is the time at which the volume is considered too old to be reliable. When the expiration date has passed, a volume can still be read but will not be mounted for a write.

When you add a new volume, there is no default expiration date.

The expiration date is not the same as the retention period for the backup data on the volume. The expiration date that you can set in this dialog refers only to the physical expiration of the volume and is independent of the backup data written on the volume.

The backup data expiration date is managed separately by the application that is using the volume. In the case of NetBackup, the expiration date for the data is set as the retention level during schedule configuration.

▼ **To not make any changes to Expiration date**

❖ Select **Do not change**.

▼ **To use no expiration date**

❖ Select **Never**.

▼ **To set an expiration date**

1. Click **Date**.
2. Enter a number to specify the date and time.

Description

Specifies a description of how the selected volumes are being used or any other relevant information about the volumes.

▼ **To not make any changes to Description**

❖ Select **Do not change**.

▼ **To add a description**

1. Click **Media Description**.
2. Enter the description.

Volume Pool

Volume Pool does not apply to cleaning tapes.

Specifies the desired volume pool.

▼ **To not make any changes to Volume pool**

❖ Select **Do not change**.

▼ **To specify a volume pool**

1. Click **New Pool**.
2. Click the **arrow** and select from the list of previously configured volume pools.

Number of Cleanings Remaining

Number of Cleanings Remaining applies only to cleaning tapes.

Specifies the number of cleanings that are allowed for the cleaning tape. This number is decremented with each cleaning and when it is zero, Media Manager stops using the tape. At this point, you can change the cleaning tape or increase the number of cleanings allowed.

▼ **To not make any changes to Number of cleanings remaining**

❖ Select **Do not change**.

▼ **To change the number of cleanings**

1. Click **New Count**.
2. Enter a number or click an **arrow** to specify the number.

Changing the Volume Group of a Volume

▼ **To change the volume group**

1. In the NetBackup Administration Console, click **Media and Device Management** > **Media**.
2. In the volume list, select the volumes that you want to change the volume group assignment for.
3. Click **Actions** > **Change Volume Group**.

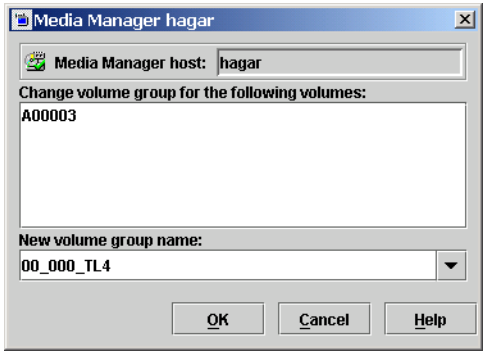

4. Enter a name in the **New volume group name** box or click the **arrow** to select a name from the list of volume groups.

5. Click **OK**.

   The name change is reflected in the volume list entry for the selected volumes. If you specified a new volume group, the group appears under **Volume Groups** in the tree pane.

Moving A Volume Group

In addition to moving individual volumes, you can move an entire volume group. This move can be one of the following:

- From a robotic library to standalone
- From standalone to a robotic library

▼ To move a volume group

1. In the NetBackup Administration Console, click **Media and Device Management** > **Media**.

2. In the tree pane, select the volume group that you want to move.

3. Click **Actions** > **Move**.

   In the dialog that appears, the current attributes of the volume group you selected are displayed. These fields cannot be changed.

4. If you are moving the volume group from a robotic library to standalone, **Standalone** is pre-selected as the destination. For this type of move, fields that are not used cannot be selected.

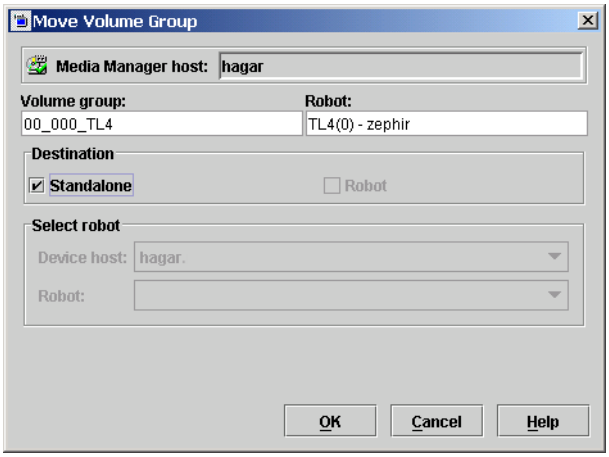

5. If you are moving the volume group from standalone to a robotic library, **Robot** is pre-selected as the destination.

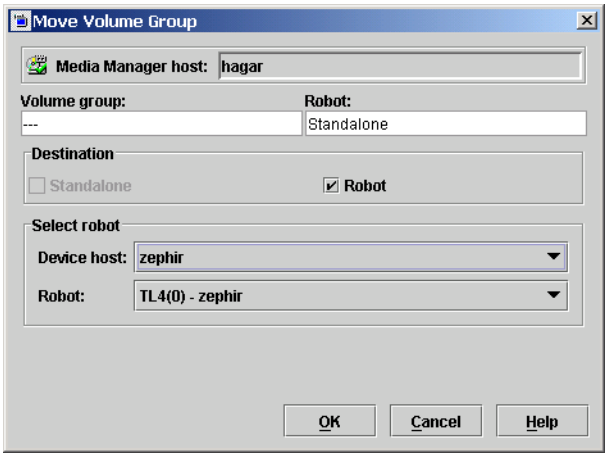

a. *This step applies only to NetBackup Enterprise Server.*

   Select the device host that controls the robotic library, by clicking the **arrow** and selecting from the list of hosts shown.

b. Select the destination robotic library, by clicking the **arrow** and selecting from the list of robots.

6. Click **OK**.

7. Physically move the volumes to their new location.

   Moving a volume group in Media Manager changes only their residence information in the volume database. The volumes must also be physically moved.

Exchanging Volumes

In general, you should exchange volumes (replace one volume with another volume) if the volumes meet any of the following conditions:

- Full (in this case, to exchange a volume means moving the volume out of a robotic tape library).
- Past their maximum allowable number of mounts.
- Too old (past their expiration date).
- Unusable (for example, because of repeated media errors).

The following are procedures for replacing volumes, depending on whether you want to reuse the old media ID or not.

Exchanging a Volume and Using a New Media ID

Use this procedure when the volume you are replacing has unexpired and valid NetBackup images, and you require slots in the robotic library for additional backups, duplications, vault functions, or other purposes.

In the following example the volume may be full and you require more library capacity.

▼ To exchange a volume and use a new media ID

1. Move the volume to another location (see "Moving Volumes" on page 141).

   If the volume is in a robotic library, you may want to take it out of the robotic library and move it to a standalone group.

2. Add a new volume or move an existing volume in as a replacement for the volume you removed.

   If you add a new volume, specify some of the same attributes as the old volume (such as, robotic residence, volume pool, and the media type). Make sure you specify a new media ID. See "Adding New Volumes" on page 128.

3. Physically replace the old volume, but do not delete the volume entry for that Media ID (in case the data on the volume needs to be retrieved).

Exchanging a Volume and Using the Old Media ID

This procedure allows you to reuse the same set of existing media IDs, which may be convenient in some instances.

Caution Reuse a media ID only if all data on the old volume is no longer needed and you are going to recycle it later, or if the volume is damaged and you are going to discard it. Otherwise, you may encounter serious operational problems and a possible loss of data.

▼ **To exchange a volume and use the old media ID**

1. Delete the volume entry (this will clear the mount, origination, and access statistics for the volume) and physically remove the old volume from the storage device. See "When to Delete Volumes" on page 147.

2. Physically add the new volume to the storage device.

3. Logically add the new volume to the Media Manager configuration and specify the same attributes as the old volume, including the old media ID. See "Adding New Volumes" on page 128.

4. Set a new Expiration Date for this volume. See "Changing the Attributes for a Volume" on page 155.

5. Optionally, relabel the volume. Relabeling is not required for robotic library-based media, but relabeling puts the media in a known state (the external and recorded media labels match, and the mode is known to be compatible with the drives in the robotic library).

Recycling Volumes

Caution Recycle a volume only if all NetBackup data on the volume is no longer needed, or if the volume is damaged and unusable. Otherwise, you may encounter serious operational problems and a possible loss of data.

Recycling Volumes Using the Existing Media ID

Recycling a NetBackup or Storage Migrator volume without changing its media ID is usually done when the last valid image expires. If the volume has unexpired NetBackup or Storage Migrator images, see "Deassigning Volumes" on page 153.

Recycling Volumes Using a New Media ID

Use the following procedure if a volume was previously a duplicate copy of another volume with the same media ID, or your site convention for naming volumes changes and you want to match the barcodes on the volume.

1. Physically remove the volume from the storage device.

2. If the volume is in a robotic library, move it to standalone. See "Moving Volumes" on page 141.

3. Record the current number of mounts and expiration date for the volume.

4. Delete the volume entry. See "When to Delete Volumes" on page 147.

5. Add a new volume entry, and physically add the volume to the storage device. See "Adding New Volumes" on page 128.

6. Set the maximum mounts to a value that is equal to or less than the following value that you calculate. Calculate *value* as follows:

   value = (number of mounts that the manufacturer recommends) - (the value that you recorded in step 3)

   This is necessary because the count will start from zero for the new volume entry.

7. Set the number of mounts to the value you recorded in step 3 by using the following command:

   `/usr/openv/volmgr/bin/vmchange -m` *media_id* `-n` *number_of_mounts*

8. Set the expiration date to the value you recorded in step 3.

Managing Media in Robots 4

See "Starting Media Management" on page 102 for an explanation of the NetBackup **Media** window that you use in the procedures of this chapter, and the list of characters that are supported by Media Manager.

Most of the operations used to manage media in robots are done using the Robot Inventory dialog (see "Overview of Robot Inventory Operations" on page 165).

In addition to the functions available in the Robot Inventory dialog, you can check the barcodes of volumes in certain robot types and update the volume database to agree with the contents of the robotic library. For detailed instructions, see "Rescanning and Updating Barcodes for a Robot" on page 220.

- If you have Backup Exec volumes to manage, see the Backup Exec tape reader topics in the NetBackup system administrator's guide for Windows servers.
- If you have volumes without barcodes to manage, see "Using the Physical Inventory Utility for Non-Barcoded Media" on page 348.

Overview of Robot Inventory Operations

To use the Robot Inventory dialog for robot management, you need to perform a set of common initial steps. See "Accessing the Robot Inventory Dialog" on page 167 to access and initiate these operations.

The following operations are available using the functions of the Robot Inventory dialog:

- **Show contents**

  Inventories the selected robotic library and generates a report. This operation does not check or change the volume database, but is useful for determining the contents of a robot as shown in the following table:

Type of Robot	Report Contents
Robot has a barcode reader and the robot contains media with barcodes.	Shows if each slot has media and lists the barcode for the media.

Type of Robot	Report Contents
Robot does not have a barcode reader or robot does not contain media with barcodes.	Shows if each slot has media.
API robot.	Shows a list of volumes found in the robot.

For detailed instructions, see "Showing the Contents of a Robot" on page 169.

- **Compare contents with volume configuration**

  Compares the contents of a robotic library with the contents of the Media Manager volume database. Regardless of the result the volume database is not changed. For robots without barcode readers and also containing media with barcodes, this operation is useful for determining if volumes have been physically moved within a robot.

  For detailed instructions, see "Comparing Robot Contents with the Volume Configuration" on page 172.

- **Preview volume configuration changes**

  Inventories the selected robotic library and compares the results with the contents of the volume database. If there are differences, the results section shows a list of recommended changes. A preview allows you to ensure that all new media have barcodes before they are added to the Media Manager volume database.

  After checking the results of a preview, you can perform a volume configuration update operation to update the volume database to agree with the contents of the robot.

  For instructions on performing a preview, see "Procedure To Update the Volume Configuration" on page 177.

- **Update volume configuration**

  Inventories the selected robotic library and compares the results with the contents of the Media Manager volume database. If there are differences, Media Manager updates the volume database to match the contents of the robot.

  For detailed instructions, see "Procedure To Update the Volume Configuration" on page 177.

  If you select **Update volume configuration** (or **Preview volume configuration changes)**, you also have the following capabilities available:

  - **Advanced Options**

If you select **Advanced Options ...**, you have the following additional update capabilities available. (If the option is not applicable for a particular robotic library, the tab is not available.)

Media Settings

You can specify the volume group for existing media and specify media options for new media.

Barcode Rules

A barcode rule specifies criteria for assigning attributes to new robotic volumes. The attributes are assigned according to the barcode label that is read by the robotic library.

Media ID Generation

Using media ID generation rules allows you to override the default Media Manager media ID naming method. The default method uses the last six characters of the barcode to generate the media ID.

You control how media IDs are created by defining rules that specify which characters of a barcode label will be used in the media ID.

Media Type Mappings

You can assign media-type mappings for API robots.

- **Empty media access port prior to update**

  Allows you to move (inject) volumes in the robot's media access port into the robot.

Accessing the Robot Inventory Dialog

To use the Robot Inventory dialog for robot management tasks (for example, "Comparing Robot Contents with the Volume Configuration" on page 172), you will first need to perform the following set of common steps to access the Robot Inventory dialog. These steps are always required, but are not repeated in the task descriptions in this chapter.

▼ To access the Robot Inventory dialog

1. In the NetBackup Administration Console, click **Media and Device Management** > **Media** > **Robots**.

2. Select the robot you want to inventory.

3. Click **Actions** > **Inventory Robot**.

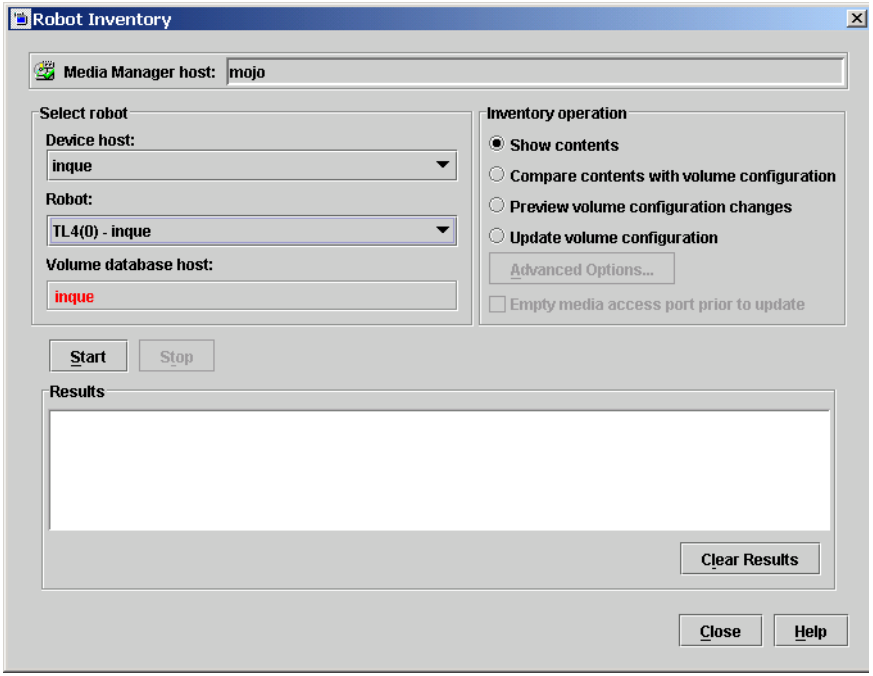

In the dialog, the **Device host** box contains the name of the host that controls the robot and the **Robot** box contains the selected robot.

Note *This note applies only to NetBackup Enterprise Server.*
If the server shown in the Volume database host box is highlighted in red, the volume database host configured for the robot you selected is *not* the volume database host (the host being managed) that will be updated during the inventory operation. This indicates possible conflicts.

4. *This step applies only to NetBackup Enterprise Server.*

   To select a robot on a different host, click the **arrow** and select a device host from the list.

5. To select a different robotic library on a host, click the **arrow** and select from the list of robots on that host.

   In the dialog, the **Device host** box contains the name of the host that controls the robot and the **Robot** box contains the robot you selected.

Showing the Contents of a Robot

▼ To show robot contents

1. Perform the steps described in "Accessing the Robot Inventory Dialog" on page 167.

2. In the Inventory operation section of the Robot Inventory dialog, select **Show contents**.

   To clear any previous display in the Results section, click **Clear Results**.

3. Click **Start** to start the inventory.

   The inventory report appears in the Results section of the dialog.

Show Contents Report (non API robot)

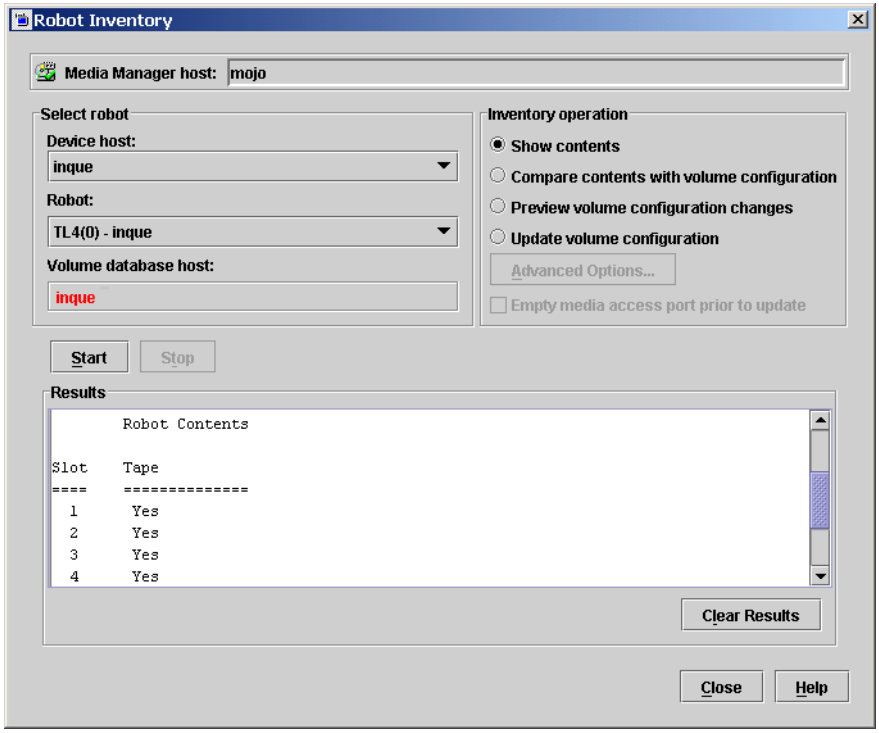

Note If a volume is mounted in a drive, the inventory report lists the slot that it was in before it was moved to the drive.

For robots (other than API robots) that have a barcode reader, Media Manager obtains the barcode from the robot and includes it in the report.

See "Robot Attributes" on page 305 for information on the robots that support barcode readers and the supported barcode length.

See "How Contents Reports for API Robots are Generated" on page 170 for information on the reports that are generated for API robots.

How Contents Reports for API Robots are Generated

The following figure shows an example report for an ACS robot. The reports for other API robots are similar to this report.

Show Contents Report (API Robot)

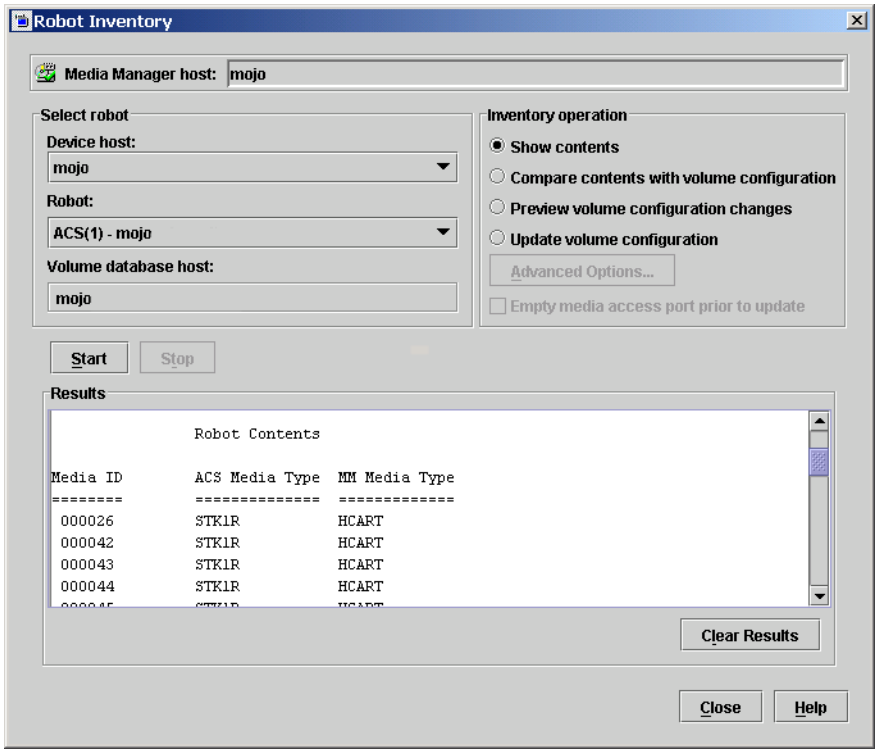

ACS Robots

This is a NetBackup Enterprise Server topic.

Media Manager reports what it receives from ACS library software. The resulting report shows the ACS library software volume ID, the ACS media type, and the Media Manager media type.

- The Media Manager media ID corresponds to the ACS library software volume ID.
- The report shows the mapping between the ACS library software media type and the corresponding Media Manager media type (without considering optional barcode rules).

See "Robot Inventory Operations" on page 482 for more information on how Media Manager reports what it receives from ACS library software.

LMF Robots

This is a NetBackup Enterprise Server topic.

Media Manager reports what it receives from the Library Management Facility (LMF). The resulting report shows the volser (volume serial number), the LMF media type, and the Media Manager media type.

- The Media Manager media ID corresponds to the LMF volser.
- The report shows the mapping between the LMF media type and the corresponding Media Manager media type (without considering optional barcode rules).

See the LMF appendix, "Fujitsu Library Management Facility (LMF)" on page 519 for more information on how Media Manager reports what it receives from LMF.

RSM Robots

Media Manager reports what it receives from the Windows Removable Storage service. The resulting report shows a list of media (by media name) obtained from the service along with their RSM and Media Manager media types.

TLH Robots

This is a NetBackup Enterprise Server topic.

Media Manager reports what it receives from the Automated Tape Library (ATL) library manager. The resulting report shows the volser (volume serial number), the ATL media type, and the Media Manager media type.

- The Media Manager media ID corresponds to the ATL volser.
- The report shows the mapping between the ATL media type and the corresponding Media Manager media type (without considering optional barcode rules).

See the TLH appendix, "IBM Automated Tape Library (ATL)" on page 493 for more information on how Media Manager reports what it receives from the IBM ATL library manager.

TLM Robots

This is a NetBackup Enterprise Server topic.

Media Manager reports what it receives from DAS/SDLC server. The resulting report shows the volser (volume serial number), the DAS/SDLC media type, and the Media Manager media type.

- The Media Manager media ID corresponds to the DAS/SDLC volser.
- The report shows the mapping between the DAS/SDLC media type and the corresponding Media Manager media type (without considering optional barcode rules).

See the TLM appendix, "ADIC Distributed AML Server/Scalar Distributed Library Controller" on page 507 for more information on how Media Manager reports what it receives from the DAS/SDLC server.

Comparing Robot Contents with the Volume Configuration

▼ **To compare robot contents with the volume configuration**

1. Perform the steps described in "Accessing the Robot Inventory Dialog" on page 167.

2. In the Inventory operation section of the Robot Inventory dialog, select **Compare contents with volume configuration**.

   To clear any previous display in the Results section, click **Clear Results**.

3. Click **Start** to start the compare.

   Media Manager requests an inventory from the selected robotic library and compares the results from the robot with the contents of the volume database.

   See "Compare Volume Configuration Reports" on page 173 for information on the reports that are generated.

4. If the report shows that the volume database does not match the contents of the robotic library, do *one* of the following:

a. Physically move the volume.

b. Correct the condition by using **Media and Device Management** > **Media** > **Actions** > **Move** or by updating the volume configuration as explained in "Procedure To Update the Volume Configuration" on page 177.

Compare Volume Configuration Reports

The Results section of the dialog shows any discrepancies as follows:

- If the robot can read barcodes (see "Robot Attributes" on page 305), the report includes barcode information. Media Manager determines if the barcodes in the robot match those in the volume database.

The following figure shows a sample compare report.

Note *Selecting a device host applies only to NetBackup Enterprise Server.*

Compare Contents Report (Non-API Robot That Can Read Barcodes)

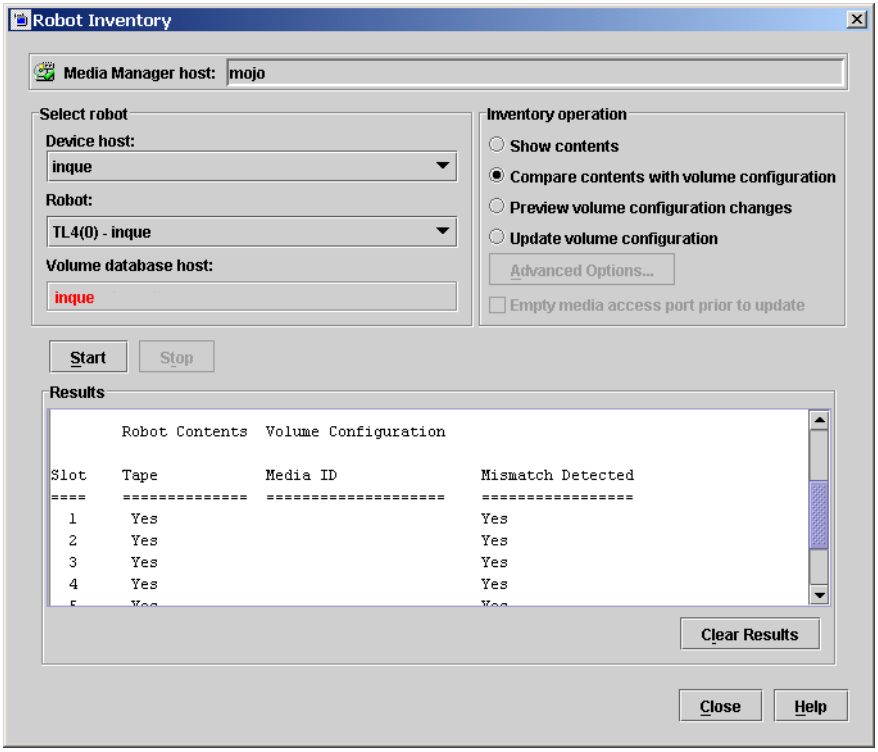

- For API robots, Media Manager determines whether the media ID and media type in the Media Manager volume database matches what it receives from the vendor's service library software database or from Windows Removable Storage in the case of RSM robots.

  The following figure shows an example compare report for an ACS robot. Reports for other API robots are similar to this report.

  See "Robot Inventory Operations" on page 482 for more information on what Media Manager receives from ACS library software.

Compare Contents Report (API Robot)

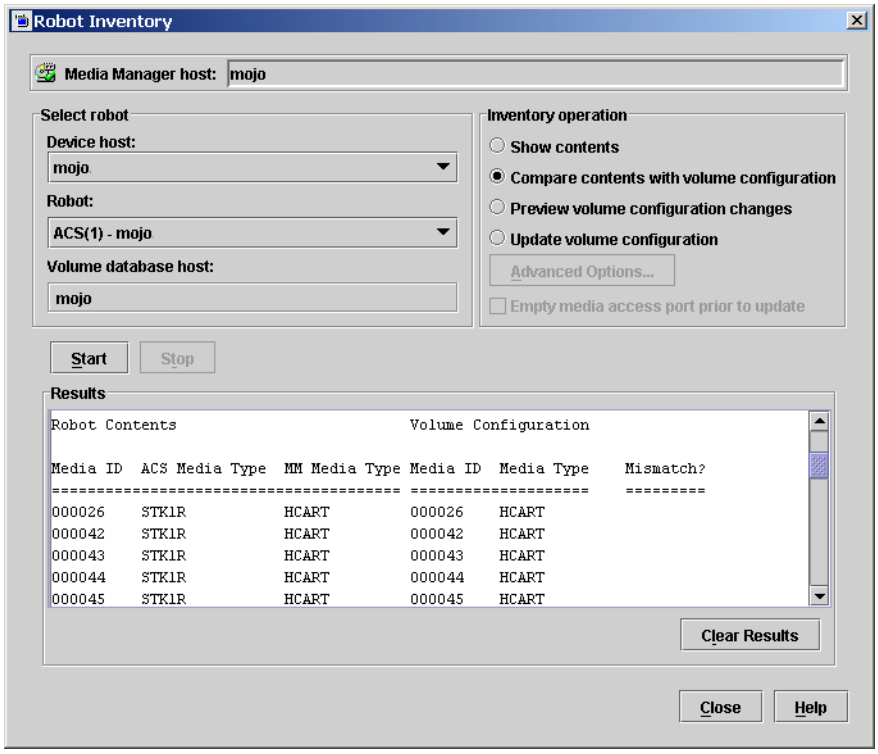

- If the robotic library cannot read barcodes, Media Manager verifies only whether the volume database correctly shows whether a slot contains a volume.

Updating the Volume Configuration for a Robot

The following topics explain how to inventory a robotic library and optionally update the volume database to match the contents of the robotic library.

- "When to Use Update Volume Configuration" on page 175
- "When Not to Use Update Volume Configuration" on page 176
- "Updating the Volume Configuration for Non-Barcoded Media" on page 177
- "Procedure To Update the Volume Configuration" on page 177
- "Media Settings Tab (Advanced Options)" on page 180
- "Barcode Rules Tab (Advanced Options)" on page 191
- "Media ID Generation Tab (Advanced Options)" on page 197
- "Media Type Mappings Tab (Advanced Options)" on page 201

When to Use Update Volume Configuration

You can use this operation on robots that Media Manager supports, regardless of whether they can read barcodes or not. The update volume configuration operation is useful for updating the volume's configuration information that is stored in the Media Manager volume database, after performing one of the following tasks:

- Removing existing volumes from a robotic library.

  This operation updates the residence information in the volume database to show the new standalone location. You specify the volume group to use.

- Inserting new volumes into a robotic library.

  The configuration update includes creation of media IDs (based on barcodes or a prefix that you specify).

  When you use barcode rules, a new volume that is added by using a barcode rule is also assigned a media type, volume pool, maximum number of mounts (or maximum number of cleanings), and description. For instructions on setting up barcode rules see "Barcode Rules Tab (Advanced Options)" on page 191.

  If the robotic library supports barcodes and the volume has readable barcode labels, the operation creates new volume entries in the volume database with media IDs that are based on the last six characters of the barcodes as the default. The specific characters that you specify are used, if you are using media ID generation rules (see "Media ID Generation Tab (Advanced Options)" on page 197).

  If the robotic library does not support barcodes or the volumes do not have readable barcodes, the new media IDs are based on a media ID prefix that you specify.

  For more information, see "Adding New Volumes" on page 128.

If the robotic library supports barcodes and the volume has a readable barcode, you can use this operation in the following cases. If you are

- Inserting existing volumes into a robotic library.

  The operation updates the residence information in the Media Manager volume database, to show the new robotic location. This includes the robot host, robot type, robot number, and slot location. You specify the volume group to use.

- Physically moving existing volumes within a robotic library.

  The operation updates the residence information in the volume database, to show the new slot location.

- Physically moving volumes between robotic and standalone.

  The operation updates the residence information in the volume database, to show the new robotic or standalone location.

- Physically moving volumes from one robotic library to another.

  If the volumes for the robots are in the same volume database (the default for NetBackup Server), you must perform two separate updates. These updates move the volumes to standalone as an intermediate step, and then to the new robot. If these updates are not done, Media Manager is unable to update the entries and you receive an "Update failed" error.

  See "Example 6: Moving Existing Volumes Between Robots" on page 217.

When Not to Use Update Volume Configuration

The following situations require a move operation or use of the Media Manager physical inventory utility (see "Updating the Volume Configuration for Non-Barcoded Media" on page 177), rather than using Update volume configuration:

- After inserting existing volumes into a robotic library, and the volume does not have readable barcodes or the robotic library does not support barcodes.

  Without barcodes, Media Manager cannot identify the volume and assigns a new media ID that uses the media ID prefix you select for the update. A volume entry for the old media ID remains in the volume database. An error may occur later, if an application attempts to use the new or old volume.

- After physically moving existing volumes that do not have readable barcodes or if the volumes are in a robot that does not support barcodes.

  If you swap volumes between two different locations, Media Manager is unable to detect the change and cannot update the volume database.

  If you remove a volume from a slot and place it in an empty slot, Media Manager assumes it is a new volume. Media Manager then adds a new logical volume entry with a generated media ID at its new robotic location. The volume entry for the old media ID is moved to standalone.

An error may occur if an application attempts to use the volume entry with the new or old media ID. See "Example 7: Adding Existing Volumes when Barcodes are Not Used" on page 218.

Updating the Volume Configuration for Non-Barcoded Media

If the robotic library does not support barcodes or the volumes do not have readable barcodes, consider using the Media Manager physical inventory utility. `vmphyinv`, the physical inventory utility, performs a physical inventory on non-barcoded tape libraries by mounting the tape, reading the tape header, identifying the tape in each slot, and updating the Media Manager volume database.

See "Using the Physical Inventory Utility for Non-Barcoded Media" on page 348 for more information.

Procedure To Update the Volume Configuration

The following point applies only to NetBackup Enterprise Server.

Before adding a volume to the Media Manager volume database, you *must* be managing the correct server or the volume will not be found when it is requested later.

▼ To determine the capabilities of a robot

1. Check the barcode capabilities of the robotic library and the volume by performing the procedure "Comparing Robot Contents with the Volume Configuration" on page 172.

   Determine if the robotic library supports barcodes *and* if any new volume that was inserted into the library has readable barcodes.

2. If the robotic library does *not* support barcodes or the volume does *not* have readable barcodes, you may want to save the results of the compare operation, as it may be useful in deciding on a media ID prefix if you use the **Media Settings** tab in **Advanced Options** to assign a prefix later in the following procedure.

   You also may want to consider using the Media Manager physical inventory utility (see "Updating the Volume Configuration for Non-Barcoded Media" on page 177).

▼ To update the volume configuration for a robot

1. Perform the steps described in "Accessing the Robot Inventory Dialog" on page 167.

2. In the Inventory operation section of the Robot Inventory dialog, select **Update volume configuration.**

To preview the update without making any changes to the volume database, select **Preview volume configuration changes**.

Caution If you preview the configuration changes first and then update the volume database, the update results may not match the results of the preview operation. This can be caused by the state of the robot, volume database, barcode rules, media type mappings and so on, that may have changed between the preview and the update.

3. For more options, click **Advanced Options ...**. For most configurations, the default settings work well. You should only change the settings if your configuration has special hardware or usage requirements.

   The advanced update options allow you to do the operations shown in the following table:

Advanced Operation	For More Information
Assign media settings for new and existing media.	See "Media Settings Tab (Advanced Options)" on page 180.
Create barcode rules.	See "Barcode Rules Tab (Advanced Options)" on page 191.
Create media ID generation rules.	See "Media ID Generation Tab (Advanced Options)" on page 197.
Map media for API robots. If you do not map media, default media types are used.	See "Media Type Mappings Tab (Advanced Options)" on page 201.

4. To move (inject) one or more volumes in the robot's media access port into the robotic library before initiating the update, select **Empty media access port prior to update**.

   Any volumes to be injected must be in the media access port before the operation begins. If **Empty media access port prior to update** is selected and there are no volumes in the port, you are *not* prompted to place volumes in the media access port and the update operation continues.

   Review "Methods for Injecting Volumes into a Robot" on page 124 for a list of robot types that determine when **Empty media access port prior to update** is available and more information on using this function.

Note If you have recently ejected volumes from the robot with the eject or move volume Media Manager commands, remove the volumes from the media access ports before performing an inject with **Empty media access port prior to update** selected. Otherwise, if the entry and exit ports are the same, the volumes that you ejected could be injected back into the robotic library.

5. To clear any previous display in the Results section, click **Clear Results**.

   Click **Start** to start the update (or the preview).

Example Update Volume Configuration Reports

The following figure shows example results for a robotic library that is not an API robot.

Note *Selecting a device host applies only to NetBackup Enterprise Server.*

Update Volume Configuration Report (Not an API Robot)

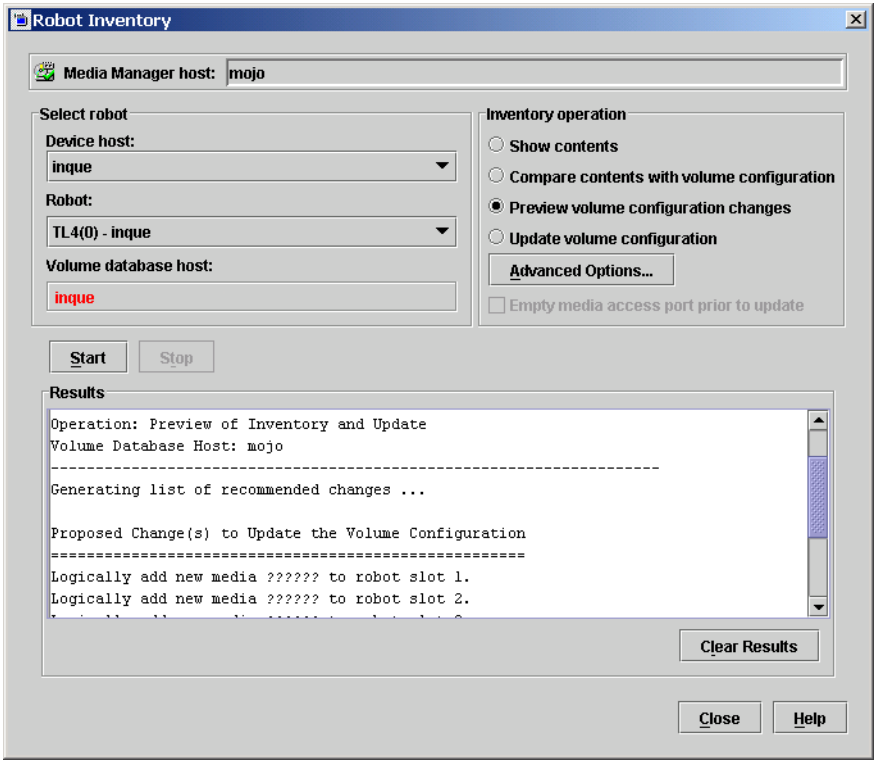

The following figure shows an example report for an ACS robot. Reports for other API robots are similar to this report.

Robot inventory update will return an error if it encounters unsupported characters in the volume serial number or media identifier that are returned by API robots.

Update Volume Configuration Report (API Robot)

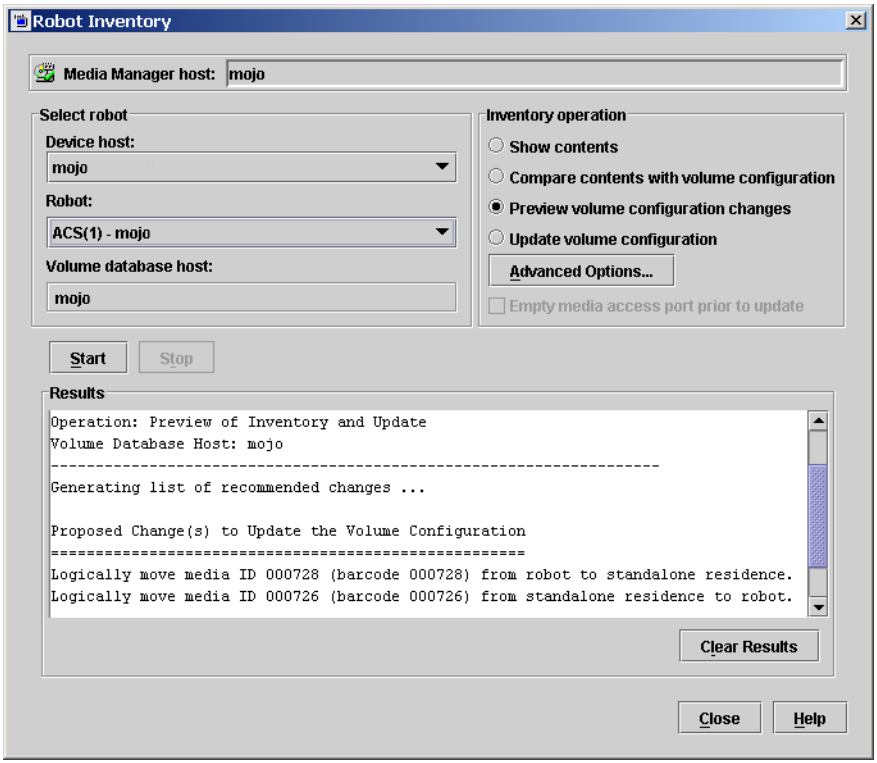

Media Settings Tab (Advanced Options)

You can use the options on this tab to specify the volume group for existing media and specify media options for new media.

Setting Media Options

▼ To use the Media Settings tab

1. In the Advanced Robot Inventory Options dialog, click **Media Settings**.

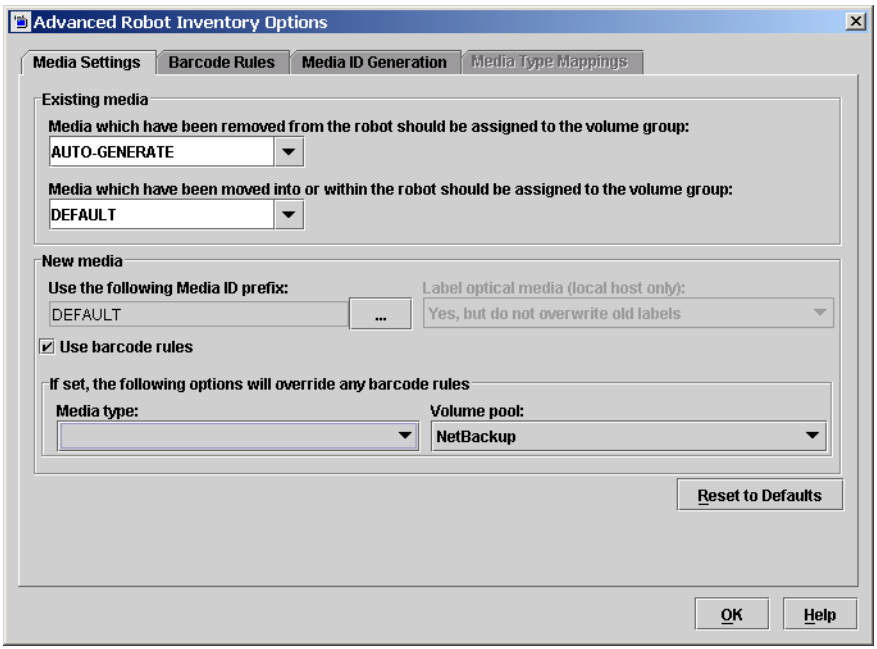

2. Specify the properties for this tab, as explained in "Properties for the Media Settings Tab" on page 181.

   To reset all properties on this tab to their defaults, click **Reset to Defaults**.

3. When you are satisfied with your settings, click **OK** to return to the Robot Inventory dialog to continue the update.

Properties for the Media Settings Tab

The following sections explain the settings you can use on this tab.

- "Media Which Have Been Removed From the Robot ..." on page 182
- "Media Which Have Been Moved Into or Within the Robot ..." on page 183
- "Use the Following Media ID Prefix" on page 184
- "Label Optical Media (Local Host Only)" on page 185

- "Use Barcode Rules" on page 186
- "Media Type" on page 186
- "Volume Pool" on page 190

Media Which Have Been Removed From the Robot ...

This property specifies the volume group that Media Manager assigns to existing media that you have removed from the robot.

If you leave the volume group set at `DEFAULT` and there is an existing group with a compatible residence for the volume, the volume is added to that group. If a suitable volume group does not exist, Media Manager generates a new volume group name.

▼ To specify a volume group other than DEFAULT

Do *one* of the following:

❖ Enter a volume group name in the box.

❖ Click the **arrow** and select from the list of choices for the volume group that Media Manager can assign to volumes that you have removed from the robot. The list always has the choices shown in the following table.

Select	To
DEFAULT	Let Media Manager choose the volume group.
AUTO-GENERATE	Automatically generate a new volume group.
NO VOLUME GROUP	Not assign a volume group.

The other available volume group choices shown in the list depend on the Media type selection as shown in the following table. See "Media Type" on page 186.

If the Media Type is	The List Shows Existing Volume Groups that are Valid for
DEFAULT	The robot's default media type (see "Specifying Media Type (when not using barcode rules)" on page 187).
Not DEFAULT	The specified media type.

Media Which Have Been Moved Into or Within the Robot ...

This property specifies the volume group that Media Manager assigns to existing media that you have inserted into the robot (or moved to a new location within the robot).

If you leave the volume group set at `DEFAULT` and there is an existing group with a compatible residence for the volume, the volume is added to that group. If a suitable volume group does not exist, Media Manager generates a new volume group name.

▼ To specify a volume group other than DEFAULT

Do *one* of the following:

- ❖ Enter a volume group name in the box.
- ❖ Click the **arrow** and select from the list of choices for the volume group that Media Manager can assign to volumes that you have moved into the robot. The list always has the choices shown in the following table.

Select	To
DEFAULT	Let Media Manager choose the volume group.
AUTO-GENERATE	Automatically generate a new volume group.

Note If the robotic library contains multiple media types, it is better to leave the volume group setting at `DEFAULT`. If you specify a volume group and volumes of different media types have been moved into or within the robotic library since the last update, the new update will fail. This occurs because volumes of differing media types cannot have the same volume group.

The other available volume group choices shown in the list depend on the Media type selection as shown in the following table. See "Media Type" on page 186.

If the Media Type is	The List Shows Existing Volume Groups that are Valid for
DEFAULT	The robot's default media type (see "Specifying Media Type (when not using barcode rules)" on page 187).
Not DEFAULT	The specified media type.

Use the Following Media ID Prefix

You should specify a Media ID prefix for any new media, if either of the following conditions exist:

- The robotic library does not support barcodes.
- The volume that was inserted does not have readable barcodes.

If the robotic library supports barcodes and the volume has readable barcodes, a prefix is *not* required because Media Manager creates the media ID in one of the following ways. This is true whether or not a barcode rule is used.

- As the default, Media Manager assigns the last six characters of the barcode as the media ID.
- You specify specific characters for the media ID using Media ID generation rules. See "Media ID Generation Tab (Advanced Options)" on page 197.

The list of available prefixes displayed will be similar to the following example list. The first two items in this example list are configured media ID prefixes. These prefixes are based on `MEDIA_ID_PREFIX` entries that were added to the `vm.conf` file on the host where you are running NetBackup administration.

```
NV
NETB
DEFAULT
```

See "The Media Manager Configuration File (vm.conf)" on page 379 for an overview of this configuration file.

`DEFAULT` always appears in the selection list. If you select `DEFAULT`, Media Manager checks the configuration file for `MEDIA_ID_PREFIX` entries, as shown in the following table:

If the vm.conf File	Then Media Manager
Contains prefix entries	Assigns the last entry as the default prefix.
Does *not* contain prefix entries	Uses the letter A, as the default prefix.

▼ To specify a media ID prefix

❖ Click **...** if you want media IDs for media generated based on a specific prefix. You then specify a media ID prefix using either of the following methods:

▼ To specify a media ID prefix by entering a new value

1. Click **Specify the media ID prefix for current session only**.
2. Enter a new value for the prefix in the text box.

   The prefix you enter is used only for the current operation. It is *not* added to the `vm.conf` file.

   You can specify a prefix having from one to five alpha-numeric characters. Media Manager assigns the remaining numeric characters to create six characters. For example, if the prefix is NETB, the media IDs are: NETB00, NETB01, and so on.
3. Click **OK** to return to the **Media Settings** tab.

▼ To specify a media ID prefix by selecting from the list

1. Click **Choose from the media ID prefix list (stored in vm.conf file)**.
2. You can optionally add a new prefix to the list (you can also remove prefixes).
   a. Enter it in the text box.
   b. Click Add.
3. Select a choice for the prefix from the list (does not have to be a prefix that was just added0.
4. Click **OK** to return to the **Media Settings** tab.

Label Optical Media (Local Host Only)

Label optical media (local host only) is enabled only if you selected an optical robot to inventory. The media labeling will only be done if the robot is attached to the local host specified during the NetBackup Java login.

Note The media is labeled, but is not formatted.

▼ To label optical media

❖ Click the **arrow** a and select one of the three choices for how you want the media labeled (**Yes, but do not overwrite old labels - Yes, overwrite as needed - No**).

Use Barcode Rules

Use this check box to specify whether or not you are using barcode rules for new media. Your choices and the resulting actions are shown in the following table:

If You	Then Media Manager
Select **Use barcode rules**	Searches existing barcode rules and applies the rules to new volumes that have been inserted into a robot.
Clear **Use barcode rules**	Ignores barcode rules.

▼ To specify if you are using barcode rules

❖ Select or clear the check box.

Media Type

Media type is not available for API robots (for example, an ACS robot or RSM robot). Media type is always set to DEFAULT for API robots.

See "Media Type Mappings Tab (Advanced Options)" on page 201 for instructions for specifying media types for API robots.

Use **Media type** to specify the media type for new media that is being added to a robot. The list displayed shows the media types that are valid for the robot. The following is an example list for a TLD robotic library:

```
DEFAULT
1/2 cartridge tape
1/2 cartridge tape 2
8MM cartridge tape
8MM cartridge tape 2
8MM cartridge tape 3
DLT cartridge tape
DLT cartridge tape 2
DLT cartridge tape 3
DTF cartridge tape
1/2 cleaning tape
1/2 cleaning tape 2
8MM cleaning tape
8MM cleaning tape 2
8MM cleaning tape 3
DLT cleaning tape
DLT cleaning tape 2
DLT cleaning tape 3
```

```
DTF cleaning tape
```

▼ To specify the media type for new media

The steps you follow to select a media type depend on whether or not you are using barcode rules, as shown in the following table:

Are You Using Barcodes?	See the Instructions in
No	"Specifying Media Type (when not using barcode rules)" on page 187.
Yes	"Specifying Media Type (when using barcode rules)" on page 188.

Specifying Media Type (when not using barcode rules)

Click the **arrow** to select from the list of media types that are valid for this robotic library. If you want to use the media type shown in first column of the following table, select the type as described in the second column.

Media Type	Select
The default media type	**DEFAULT**. If *all* of the drives in the robotic library (configured on this robot host) are ◆ The same type and at least one drive is configured on the robot control host, then Media Manager uses the media type for the drives. ◆ *Not* the same type, then Media Manager uses the default media type for the robotic library.
A media type other than the default media type	A media type from the list. Selecting a type from the list is required, if the robotic library supports multiple media types and you do not want the default media type. *The following point applies only to NetBackup Enterprise Server.* Selecting a type from the list is required if your drives are not configured on the robot control host and the drives are not the default media type for the robot.

The following table shows the default media types for robots when drives are not configured on the robot control host:

Default Media Types for Robots (Not API robots)

Robot Type	Default Media Type
Optical Disk Library (ODL)	Rewritable optical disk. Also supports write-once read-many (WORM) operations.
Tape Library 4MM (TL4)	4MM cartridge tape.
Tape Library 8MM (TL8)	8MM cartridge tape. Also supports 8MM cartridge tape 2 and 8MM cartridge tape 3.
Tape Library DLT (TLD)	DLT cartridge tape. Also supports DLT cartridge tape 2, DLT cartridge tape 3, 1/2-inch cartridge tape, 1/2-inch cartridge tape 2, 1/2-inch cartridge tape 3, 8MM cartridge tape, 8MM cartridge tape 2, 8MM cartridge tape 3, DTF cartridge tape, and 1/4-inch cartridge tape.
Tape Stacker 8MM (TS8)	8MM cartridge tape. Also supports 8MM cartridge tape 2 and 8MM cartridge tape 3.
Tape Stacker DLT (TSD)	DLT cartridge tape. Also supports DLT cartridge tape 2 and DLT cartridge tape 3.
Tape Stacker Half-inch (TSH)	1/2-inch cartridge. Also supports 1/2-inch cartridge tape 2 and 1/2-inch cartridge tape 3.

Specifying Media Type (when using barcode rules)

Click the **arrow** to select from the list of media types that are valid for this robotic library. If you want

- To let the barcode rule determine the media type that is assigned, select DEFAULT as the media type.

For example, assume you want to add DLT and half-inch cartridges to a TLD robot with a single update operation. First create separate barcode rules for DLT and half-inch cartridges and select the specific media types in the barcode rules. Then, select DEFAULT on the **Media Settings** tab. Media Manager now will use the media type in the barcode rules when it does the update.

Note If you choose DEFAULT on the **Media Settings** tab and DEFAULT in the barcode rule, Media Manager assigns the default media type for the robotic library.

◆ To use a media type other than the default, select a specific media type from the list.

For example, to use the same barcode rule to add DLT or half-inch cartridges to a TLD robot, select a specific media type on the **Media Settings** tab and select DEFAULT for the barcode rule media type when you create the barcode rule. Now you can perform one update for DLT and another for half-inch cartridge and use the same rule for both.

The media type on the **Media Settings** tab always overrides the media type of the barcode rule. If you specify any value other than DEFAULT on the **Media Settings** tab, the media type for the barcode rule must be the same media type or be DEFAULT in order to obtain a match (except for cleaning media).

The following table shows some example combinations of media types on the **Media Settings** tab and barcode rule media types for a TLD (non-API) robot and the result:

Media Type (Media Settings tab)	Barcode Rule Media Type	Rule Matches?	Media Type Added to Volume Configuration
DLT	DEFAULT	Yes	DLT
HCART	DEFAULT	Yes	HCART
DLT	DLT	Yes	DLT
DLT	DLT_CLN	Yes	DLT_CLN
DLT_CLN	DLT	No	DLT_CLN
DLT_CLN	DLT_CLN	Yes	DLT_CLN
DLT_CLN	DEFAULT	Yes	DLT_CLN
DLT	8MM, 4MM, and so on	No	DLT
DEFAULT	DEFAULT	Yes	DLT
DEFAULT	DLT	Yes	DLT

Media Type (Media Settings tab)	Barcode Rule Media Type	Rule Matches?	Media Type Added to Volume Configuration
DEFAULT	DLT_CLN	Yes	DLT_CLN
DEFAULT	8MM, 4MM, and so on	No	Depends on robot type.

The fourth barcode rule in the table shows Media Manager's ability to add cleaning cartridges with regular volumes when you execute an update for a robotic library.

If the volumes that you insert include a cleaning tape, Media Manager adds the volumes correctly. This happens if the following are all true:

- The media type on the **Media Settings** tab is for regular media (DLT, in this example).
- The barcode matches a barcode tag.
- The media type for the barcode rule is cleaning media (DLT_CLN).

Also see "Example 5: Adding Cleaning Tapes to a Robot" on page 216.

The sixth and seventh rules in the table illustrate how to add only a cleaning tape. In the sixth rule, you specify the cleaning media type on the **Media Settings** tab and in the barcode rule. In the seventh rule, you specify the cleaning media on the **Media Settings** tab and choose default when you configure the barcode rule.

Volume Pool

Use this property to specify the volume pool to which you want to assign the new media. The list displayed will be similar to the following example list:

```
DEFAULT
None
NetBackup
DataStore
a_pool
b_pool
```

▼ To specify a volume pool

❖ Click the **arrow** and select from the list of volume pools as shown in the following table:

If You are Using Barcode Rules and You Want	Then Select
To let the barcode rule determine the volume pool that is assigned to new volumes.	DEFAULT from the list.
To use a volume pool other than the default.	That volume pool name in the list. The volume pool on the Media Settings tab always overrides the rule.

If You are *Not* Using Barcode Rules and You Want	Then Select
To use the NetBackup volume pool for data volumes and no volume pool for cleaning tapes.	DEFAULT from the list.
To use a volume pool other than the default.	That volume pool name in the list.

Barcode Rules Tab (Advanced Options)

A barcode rule specifies criteria for assigning attributes to new robotic volumes. The attributes are assigned according to the barcode label that is read by the robotic library. You choose whether to use barcode rules when you assign media settings (see "Use Barcode Rules" on page 186).

The following topics explain how to manage barcode rules:

- "Adding a New Barcode Rule" on page 192
- "Changing a Barcode Rule" on page 193
- "Deleting a Barcode Rule" on page 193
- "Dialog Properties for Adding or Changing Barcode Rules" on page 193

For background information, see "Barcode Rules" on page 345.

Adding a New Barcode Rule

▼ To add a barcode rule

1. In the Advanced Robot Inventory Options dialog, click **Barcode Rules**.

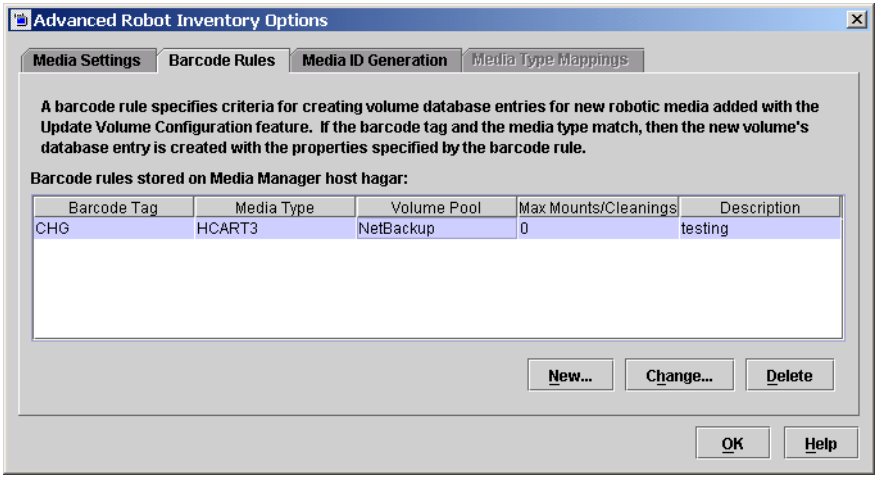

2. On the **Barcode Rules** tab, click **New ...**

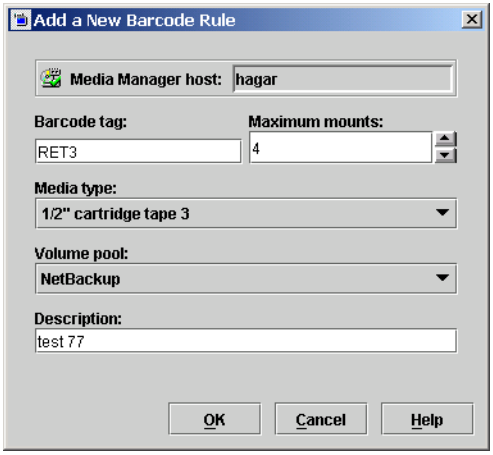

3. Specify the properties for the new barcode rule.

   See "Dialog Properties for Adding or Changing Barcode Rules" on page 193 for help on specifying these properties.

4. When you are satisfied with your settings, click **OK** to return to the Robot Inventory dialog and proceed with the update.

Changing a Barcode Rule

▼ **To change a barcode rule**

1. In the Advanced Robot Inventory Options dialog, click **Barcode Rules**.
2. In the **Barcode Rules** tab, select the rule that you want to change from the rules that are listed.
3. Click **Change ...**
4. In the dialog that appears, specify your changes. See "Dialog Properties for Adding or Changing Barcode Rules" on page 193 for help in changing the properties of the rule.

   You cannot change the barcode tag of a barcode rule using the change dialog. To change a barcode tag, you must first delete the old rule and then add a rule with a new barcode tag.
5. When you are satisfied with your settings, click **OK** to return to the Robot Inventory dialog and proceed with the update.

Deleting a Barcode Rule

▼ **To delete a barcode rule**

1. In the Advanced Robot Inventory Options dialog, click **Barcode Rules**.
2. In the **Barcode Rules** tab, select the rule you want to delete from the list of rules.
3. Click **Delete**.

   In the confirmation dialog, confirm or cancel the delete.
4. When you are done, click **OK** to return to the Robot Inventory dialog and proceed with the update.

Dialog Properties for Adding or Changing Barcode Rules

The following topics explain the settings you can make in this dialog.

◆ "Barcode Tag" on page 194

- "Maximum Mounts" on page 194
- "Media Type" on page 195
- "Volume Pool" on page 196
- "Description" on page 197

Barcode Tag

The barcode tag can have from 1 to 16 characters, but cannot contain any spaces (or special characters that appear as spaces). In the Media Manager barcode rule and volume databases, a barcode tag can have a maximum of 16 characters. But in the volume database not all 16 characters for the tag are used for all robot types.

See the Barcode Support attribute of the tables listed in "Robot Attributes" on page 305 for the maximum barcode lengths that are supported by Media Manager for each robot type.

The following rules can have special characters in the barcode tags:

- <NONE > - Matches when rules are used and the volume has an unreadable barcode or the robotic library does not support barcodes.
- <DEFAULT> - For volumes with barcodes, this tag matches when none of the other barcode tags match, providing the media type in the <DEFAULT> rule and the media type on the **Media Settings** tab are compatible.

Use the **Media Settings** tab to set up the criteria for a robot update (see "Media Settings Tab (Advanced Options)" on page 180).

▼ To specify a barcode tag

❖ Enter a tag for the rule.

Maximum Mounts

This setting is used to specify the maximum number of mounts (or cleanings) that are allowed for this volume. When a barcode rule is used, Media Manager adds the number you select to the volume database for the media ID.

Note When you specify zero (unlimited), a cleaning tape whose barcode label matches the rule will be assigned a zero for Cleanings. This means the tape will not be used unless you subsequently change Cleanings to another value. You can avoid this situation by carefully selecting the barcodes for your cleaning media.

▼ To specify maximum mounts

❖ Click an **arrow** and select a number for the volume as shown in the following table:

For	Select
Media other than cleaning tapes	The maximum number of mounts to allow.
Cleaning tapes	The number of cleanings to allow.

Media Type

This setting is used to select the media type for the barcode rule.

For a non-API robot, a barcode rule is not used unless the media type in the barcode rule is compatible with the media type you select on the **Media Settings** tab.

The media type specified on the **Media Settings** tab always overrides the media type of the barcode rule. If you specify any value other than `DEFAULT` on the **Media Settings** tab, the media type specified for the barcode rule must be the same (except for cleaning media) or be `DEFAULT` to obtain a match for the media type.

To enable barcode rule support for API robots you must add an `API_BARCODE_RULES` entry in the `vm.conf` file.

For an API robot, the media type is always set to `DEFAULT` on the **Media Settings** tab. A barcode rule is not used unless the media type specified in the barcode rule is compatible with the media type on the **Media Type Mappings** tab. See "Media Type Mappings Tab (Advanced Options)" on page 201 for more information.

See "Specifying Media Type (when using barcode rules)" on page 188 for more information, and examples showing combinations of **Media Settings** tab media types and barcode rule media types, and the results.

▼ To specify a media type

Click the **arrow** and select the media type.

Select the media type for non-API robots as explained in the following table:

If you want the media type for the barcode rule to match	Select the following media type for the barcode rule	Resulting media type that is used
Any media type that you select on the Media Settings tab	DEFAULT.	The media type that you select on the Media Settings tab. If you also select DEFAULT on the Media Settings tab, the Media Manager default media type for the robot is used.
Only when you select a specific media type or you select DEFAULT on the Media Settings tab	The same specific media type.	The media type that you select for the barcode rule.

Select the media type for API robots as explained in the following table. For API robots, you must add an `API_BARCODE_RULES` entry in the `vm.conf` file and the media type is always set to `DEFAULT` on the **Media Settings** tab.

Select the following media type for the barcode rule	Resulting media type that is used
DEFAULT.	Any media type you select in the Media Type Mappings tab. If this tab is not used, the Media Manager default media type for the robot is used.
A specific media type.	The media type that you select for the barcode rule.

Volume Pool

This property is used to select a volume pool for the volume. This is the pool that the volume will be placed in when a barcode matches the rule. Whenever the barcode rule is used and the **Media Settings** tab shows

- `DEFAULT` for the volume pool, then the volume is assigned to the pool you specified in the barcode rule.
- A specific volume pool, then that selection overrides the pool you specified in the barcode rule.

▼ To specify a volume pool

❖ Click the **arrow** and select a pool.

Description

Enter a description for the barcode rule. This could be a description of how the barcode rule will be used or any useful description determined by your site. You can enter from 1 to 25 characters.

Media ID Generation Tab (Advanced Options)

To use media ID generation rules, the robotic library must support barcodes and the robot cannot be an API robot.

Media ID generation rules allows you to override the default Media Manager media ID naming method. The default method uses the last six characters of the barcode label returned by the robot to generate the media ID. You can control how media IDs are created by defining Media ID generation rules that specify which characters of a barcode label will be used for the media ID.

The following topics explain how to use media ID generation rules:

- "Adding a New Media ID Generation Rule" on page 198
- "Changing a Media ID Generation Rule" on page 199
- "Deleting a Media ID Generation Rule" on page 199
- "Dialog Properties for Adding or Changing Media ID Generation Rules" on page 199

For background information see "Media ID Generation Rules" on page 347.

Adding a New Media ID Generation Rule

▼ To add a rule

1. In the Advanced Robot Inventory Options dialog, click **Media ID Generation**.

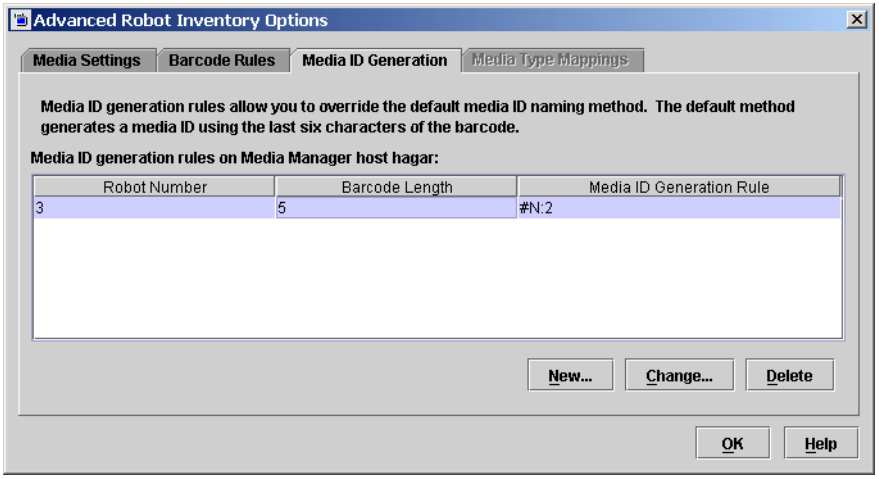

2. On the **Media ID Generation** tab, click **New ...**

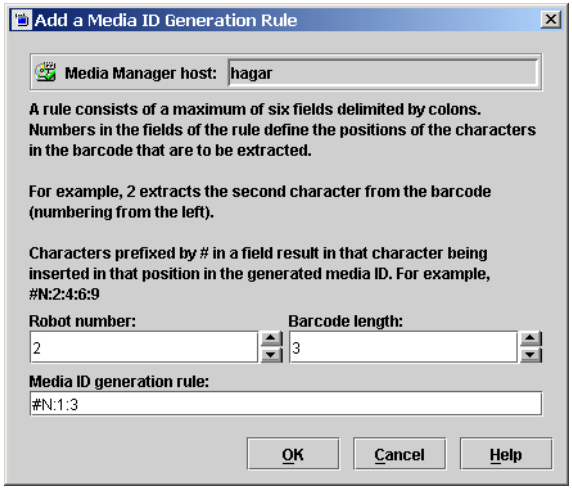

3. Specify the properties for the new media ID generation rule. See "Dialog Properties for Adding or Changing Media ID Generation Rules" on page 199 for help on specifying rules.

4. When you are satisfied with your settings, click **OK** to return to the Robot Inventory dialog and proceed with the update.

Changing a Media ID Generation Rule

▼ **To change a rule**

1. In the Advanced Robot Inventory Options dialog, click **Media ID Generation**.
2. On the **Media ID Generation** tab, select a rule or rules from the list of rules.
3. Click **Change ...**
4. In the dialog specify your changes for the rule. You cannot change the Robot Number or Barcode Length fields.

   See "Dialog Properties for Adding or Changing Media ID Generation Rules" on page 199 for help in changing the rule.
5. When you are satisfied with your settings, click **OK** to return to the Robot Inventory dialog and proceed with the update.

Deleting a Media ID Generation Rule

▼ **To delete a rule**

1. In the Advanced Robot Inventory Options dialog, click **Media ID Generation**.
2. On the **Media ID Generation** tab, select a rule or rules from list.
3. Click **Delete**.

   In the dialog, confirm or cancel the delete action.
4. When you are done, click **OK** to return to the Robot Inventory dialog and proceed with the update.

Dialog Properties for Adding or Changing Media ID Generation Rules

The following topics explain the settings you can make on this dialog.

Robot Number

▼ To specify a robot number

❖ Click an **arrow** and select a robot number where this rule will apply.

Barcode Length

▼ To specify a barcode length

❖ Click an **arrow** and select the length of the barcode for tapes in this robotic library and for this rule.

Media ID Generation Rule

▼ To specify a rule

❖ Enter a generation rule for media IDs.

A rule consists of a maximum of six fields that must be delimited by colons. Numbers in the fields of the rule define the positions of the characters in the barcode that are to be extracted. For example, 2 in a field extracts the second character from the barcode (the numbering is done from the left). The numbers can be specified in any order.

Characters prefixed by # in a field result in that character being inserted in that position in the generated ID. Any alphanumeric characters that are specified must be valid for a media ID.

The following table shows some examples of rules and the resulting media IDs. You can use rules to create media IDs of many varied formats, but remember that the difference in the label on the media and the generated media ID may make it difficult to keep track of your media.

Eight-character Tape Barcode	Media ID Generation Rule	Generated Media Manager Media ID
032945L1	1:2:3:4:5:6	032945
032945L1	3:4:5:6:7	2945L
032945L1	#N:2:3:4:5:6	N32945
543106L1	#9:2:3:4	9431

Eight-character Tape Barcode	Media ID Generation Rule	Generated Media Manager Media ID
543106L1	1:2:3:4:#P	5431P

Media Type Mappings Tab (Advanced Options)

This tab is available only for API robots. *API robots are ACS, LMF, RSM, TLH, or TLM robot types on NetBackup Enterprise Server; and the RSM robot type on NetBackup Server.*

For API robots, the Media type setting on the **Media Settings** tab is always set to DEFAULT (see "Media Type" on page 186). Media Manager uses the mappings on the **Media Type Mappings** tab to set the media type for new volumes for API robots.

The following topics explain how to use media type mappings:

- "How the Mapping Defaults Shown on the Tab are Determined" on page 201
- "Using the Tab to Change Media Type Mappings" on page 201
- "Adding Mapping Entries to vm.conf" on page 203
- "Default and Allowable Media Types for API Robots" on page 203

How the Mapping Defaults Shown on the Tab are Determined

The default media types shown on the **Media Type Mappings** tab are the media types shown in the second column of the API robot tables (see "Default and Allowable Media Types for API Robots" on page 203).

Note The update operation also uses any robot-specific media mappings you have added to the Media Manager configuration file (see "Adding Mapping Entries to vm.conf" on page 203).
If the `vm.conf` file does not exist or it does not contain media mapping entries for that robot and media type, the update operation uses the default media types and any mappings that you have set on the **Media Type Mappings** tab.

Using the Tab to Change Media Type Mappings

On the **Media Type Mappings** tab you can change the media types for a particular robot vendor (or operating system software in the case of RSM robots) that is shown, to one of the allowable Media Manager types for that robot vendor. Media Manager uses any mappings that you have set on this tab for this update. Your mapping changes apply only to the current volume configuration update.

▼ To change media type mappings

1. In the Advanced Robot Inventory Options dialog, click **Media Type Mappings**. The list that is presented on the tab contains mappings only for the robot type that has been selected for inventory.

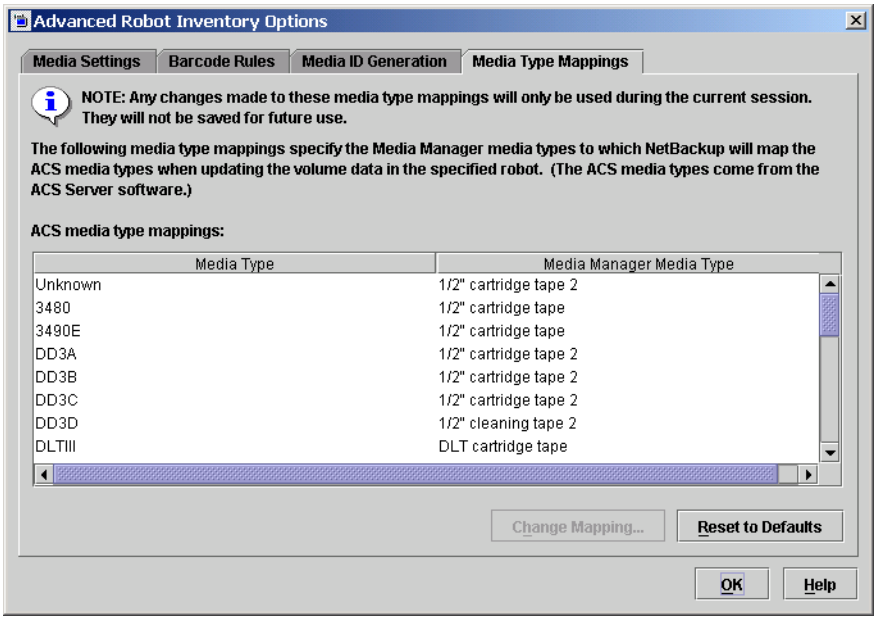

2. Select the row that contains the robot-vendor media type mapping that you would like to change and click **Change Mapping**.

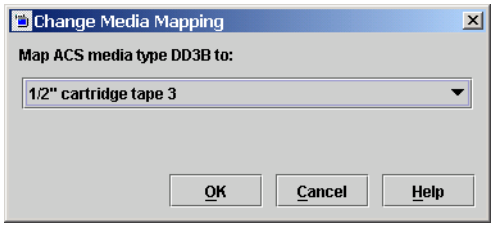

3. In the Change Media Mapping dialog, click the **arrow** and select a Media Manager type from the list of allowable choices.

   Click **OK.**

   To reset the **Media Type Mappings** tab to show the original default mappings, click **Reset to Defaults**.

4. When you are satisfied with your mappings, click **OK** to return to the Robot Inventory dialog and proceed with the volume configuration update.

Adding Mapping Entries to vm.conf

If the default choices on the **Media Type Mappings** tab do not provide the desired mappings, you can change the default that appears in this tab by adding robot-specific media mappings (for example, RSM_*mediatype* entries for RSM robots) to the Media Manager configuration file (`vm.conf`) on the host where you are running NetBackup administration.

The following table shows some examples of robot-specific media mappings:

vm.conf Entry	Result	Default Without a vm.conf Entry
ACS_3490E = HCART2	Maps the ACS 3490E to the HCART2 media type.	Media Manager assigns HCART to ACS 3490E media types.
ACS_DLTIV = DLT2	Maps ACS DLTIV to the DLT2 media type.	Media Manager assigns DLT to all ACS DLT media types, including DLTIV.
RSM_UNKNOWN = 8MM	Maps the RSM unknown to the 8MM media type.	Media Manager assigns HCART to unknown media types.
TLH_3490E = HCART2	Maps the TLH 3490E to the HCART2 media type.	Media Manager assigns HCART to TLH 3490E media types.

See "The Media Manager Configuration File (vm.conf)" on page 379 for an overview of the configuration file.

Default and Allowable Media Types for API Robots

The following tables contain the default and allowable media types for the API robots. The second column of each table shows the default media type and the third column shows the allowable media types to which you can change the defaults, by creating map entries in the `vm.conf` file.

For example, the Allowable Media Types Through Mappings column of the third and fourth rows of the following table shows that for ACS robots you cannot specify either of the following map entries in the configuration file:

```
ACS_DD3A = DLT
ACS_DD3A = HCART4
```

Default and Allowable Media Types for ACS Robots

ACS Media Type	Default Media Manager Media Type	Allowable Media Types Through Mappings
3480	1/2-inch cartridge (HCART)	HCART, HCART2, HCART3
3490E	1/2-inch cartridge (HCART)	HCART, HCART2, HCART3
DD3A	1/2-inch cartridge tape 2 (HCART2)	HCART, HCART2, HCART3
DD3B	1/2-inch cartridge tape 2 (HCART2)	HCART, HCART2, HCART3
DD3C	1/2-inch cartridge tape 2 (HCART2)	HCART, HCART2, HCART3
DD3D	1/2-inch cartridge cleaning tape 2 (HC2_CLN)	HC_CLN, HC2_CLN, HC3_CLN
DLTIII	Digital Linear Tape (DLT)	DLT, DLT2, DLT3
DLTIIIXT	Digital Linear Tape (DLT)	DLT, DLT2, DLT3
DLTIV	Digital Linear Tape (DLT)	DLT, DLT2, DLT3
STK1R	1/2-inch cartridge (HCART)	HCART, HCART2, HCART3
STK1U	1/2-inch cartridge cleaning tape (HC_CLN)	HC_CLN, HC2_CLN, HC3_CLN
EECART	1/2-inch cartridge (HCART)	HCART, HCART2, HCART3
JLABEL	1/2-inch cartridge (HCART)	HCART, HCART2, HCART3
STK2P	1/2-inch cartridge tape 2 (HCART2)	HCART, HCART2, HCART3
STK2W	1/2-inch cartridge cleaning tape 2 (HC2_CLN)	HC_CLN, HC2_CLN, HC3_CLN
KLABEL	1/2-inch cartridge (HCART)	HCART, HCART2, HCART3
LTO_200G	1/2-inch cartridge (HCART2)	HCART, HCART2, HCART3
LTO_100G	1/2-inch cartridge (HCART)	HCART, HCART2, HCART3

Default and Allowable Media Types for ACS Robots (continued)

ACS Media Type	Default Media Manager Media Type	Allowable Media Types Through Mappings
LTO_50GB	1/2-inch cartridge (HCART)	HCART, HCART2, HCART3
LTO_35GB	1/2-inch cartridge (HCART)	HCART, HCART2, HCART3
LTO_10GB	1/2-inch cartridge (HCART)	HCART, HCART2, HCART3
LTO_CLN2	1/2-inch cartridge cleaning tape (HC_CLN)	HC_CLN, HC2_CLN, HC3_CLN
LTO_CLN3	1/2-inch cartridge cleaning tape (HC_CLN)	HC_CLN, HC2_CLN, HC3_CLN
LTO_CLN1	1/2-inch cartridge cleaning tape (HC_CLN)	HC_CLN, HC2_CLN, HC3_CLN
SDLT	Digital Linear Tape 3 (DLT3)	DLT, DLT2, DLT3
VIRTUAL	1/2-inch cartridge tape 2 (HCART2)	HCART, HCART2, HCART3, HC_CLN, HC2_CLN, HC3_CLN, DLT, DLT2, DLT3, DLT_CLN, DLT2_CLN, DLT3_CLN
LTO_CLNU	1/2-inch cartridge cleaning tape (HC_CLN)	HC_CLN, HC2_CLN, HC3_CLN
UNKNOWN (for unknown ACS media types)	1/2-inch cartridge tape 2 (HCART2)	HCART, HCART2, HCART3, HC_CLN, HC2_CLN, HC3_CLN, DLT, DLT2, DLT3, DLT_CLN, DLT2_CLN, DLT3_CLN

Default and Allowable Media Types for LMF Robots

LMF Media Type	Default Media Manager Media Type	Allowable Media Types Through Mappings
18/36TRK	1/2-inch cartridge (HCART)	HCART, HCART2, HCART3
128TRK	1/2-inch cartridge (HCART)	HCART, HCART2, HCART3

Default and Allowable Media Types for LMF Robots (continued)

LMF Media Type	Default Media Manager Media Type	Allowable Media Types Through Mappings
UNKNOWN (for unknown LMF media types)	1/2-inch cartridge tape 2 (HCART2)	HCART, HCART2, HCART3

Default and Allowable Media Types for RSM Robots

RSM Media Type	Default Media Manager Media Type	Allowable Media Types Through Mappings
DDS_4MM	4mm cartridge (4MM)	4MM
MINI_QIC	1/4-inch cartridge (QCART)	QCART
TRAVAN	1/4-inch cartridge (QCART)	QCART
QIC	1/4-inch cartridge (QCART)	QCART
MP_8MM	8mm cartridge (8MM)	8MM, 8MM2, 8MM3
AME_8MM	8mm cartridge (8MM)	8MM, 8MM2, 8MM3
AIT1_8MM	8mm cartridge (8MM)	8MM, 8MM2, 8MM3
DLT	Digital Linear Tape (DLT)	DLT, DLT2, DLT3
IBM_MAGSTAR_3590	1/2-inch cartridge (HCART)	HCART, HCART2, HCART3
IBM_MAGSTAR_MP	1/2-inch cartridge (HCART)	HCART, HCART2, HCART3
STK_DATA_D3	1/2-inch cartridge (HCART)	HCART, HCART2, HCART3
CLEANER_CARTRIDGE	1/2-inch cartridge (HC_CLN)	HC_CLN, HC2_CLN, HC3_CLN, 4MM_CLN, 8MM_CLN, 8MM_CLN2, 8MM_CLN3, DLT_CLN, DLT2_CLN, DLT3_CLN
MP2_8MM	8mm cartridge (8MM)	8MM, 8MM2, 8MM3

Default and Allowable Media Types for RSM Robots (continued)

RSM Media Type	Default Media Manager Media Type	Allowable Media Types Through Mappings
UNKNOWN (for unknown RSM media types)	1/2-inch cartridge (HCART)	HCART, HCART2, HCART3, 4MM, 8MM, 8MM2, 8MM3, QCART, DLT, DLT2, DLT3
STK_EAGLE	1/2-inch cartridge (HCART)	HCART, HCART2, HCART3
LTO_ULTRIUM	1/2-inch cartridge (HCART)	HCART, HCART2, HCART3
LTO_ACCELIS	1/2-inch cartridge (HCART)	HCART, HCART2, HCART3

Default and Allowable Media Types for TLH Robots

TLH Media Type	Default Media Manager Media Type	Allowable Media Types Through Mappings
3480	1/2-inch cartridge (HCART)	HCART, HCART2, HCART3
3490E	1/2-inch cartridge (HCART)	HCART, HCART2, HCART3
3590J	1/2-inch cartridge (HCART)	HCART, HCART2, HCART3
UNKNOWN (for unknown TLH media types)	1/2-inch cartridge tape 2 (HCART2)	HCART, HCART2, HCART3
3590K	1/2-inch cartridge (HCART)	HCART, HCART2, HCART3

Default and Allowable Media Types for TLM Robots

TLM Media Type	Default Media Manager Media Type	Allowable Media Types Through Mappings
3480	1/2-inch cartridge (HCART)	HCART, HCART2, HCART3

Default and Allowable Media Types for TLM Robots (continued)

TLM Media Type	Default Media Manager Media Type	Allowable Media Types Through Mappings
OD_THICK	NONE (OD_THICK is translated to media type REWR_OPT for robot contents reports. OD_THICK is ignored for all other robotic inventory operations)	NONE
DECDLT	Digital Linear Tape (DLT)	DLT, DLT2, DLT3
8MM	8mm cartridge (8MM)	8MM, 8MM2, 8MM3
4MM	4mm cartridge (4MM)	4MM
3590	1/2-inch cartridge (HCART)	HCART, HCART2, HCART3
DTF	DTF cartridge (DTF)	DTF
SONY_AIT	8mm cartridge (8MM)	8MM, 8MM2, 8MM3
LTO	1/2-inch cartridge (HCART)	HCART, HCART2, HCART3
UNKNOWN (for unknown TLM media types)	1/2-inch cartridge tape 2 (HCART2)	HCART, HCART2, HCART3, DLT, DLT2, DLT3, 8MM, 8MM2, 8MM3

Note The following TLM media types are not supported: OD_THIN, D2, VHS, CD, TRAVAN, BETACAM, AUDIO_TAPE, BETACAMCL, DVCM, and DVCL.

Examples of Updating a Volume Configuration

The following examples show only the relevant dialog and volume attributes.

Example 1: Removing a Volume from a Robot

The following is an example of removing a volume from a robotic library. It does not matter whether the robot supports barcodes.

1. The following are the attributes for media ID 800001.

media ID	800001
media type	8MM cartridge tape
barcode	TL800001
media description	tl8 backup volume
volume pool	NetBackup
robot type	TL8 - Tape Library 8MM
volume group	EXB220
max mounts allowed	0 (unlimited)

2. Assume that you remove the volume from the robotic library, specify the following on the **Media Settings** tab, and then execute the update.

media type	DEFAULT
volume group	NONROB_8MM
volume pool	DEFAULT

3. The resulting volume attributes for media ID 800001 are as follows:

media ID	800001
media type	8MM cartridge tape
barcode	TL800001
media description	tl8 backup volume
volume pool	NetBackup
robot type	NONE - Not Robotic
volume group	NONROB_8MM

max mounts allowed	0 (unlimited)

The new residence information in the volume database shows a standalone location in the volume group, specified by the volume group on the **Media Settings** tab. The media type and volume pool remain unchanged.

The results are the same for a volume that does not have a barcode.

Example 2: Adding Existing Standalone Volumes to a Robot

The following is an example of adding a standalone volume, that has a barcode, to a robotic library that supports barcodes (TL8).

Note When moving volumes from robot to robot, you must do two separate updates, as explained in "Example 6: Moving Existing Volumes Between Robots" on page 217.

1. The following are the volume attributes for media ID 800021, which has a readable barcode and already exists as a standalone volume.

media ID	800021
media type	8MM cartridge tape
barcode	TL800021
media description	8MM standalone
volume pool	None
robot type	None (Standalone)
volume group	NONROB_8MM
max mounts allowed	0 (unlimited)

2. Assume that you insert the volume into a TL8 robot, specify the following on the **Media Settings** tab, and then execute the update.

media type	DEFAULT
volume group	EXB220

use barcode rules	YES (selected)
volume pool	NetBackup

The barcode rules shown in the following table exist:

Barcode Tag	Media Type	Volume Pool	Max Mounts/ Cleanings	Description
CLND	DLT_CLN	None	30	dlt cleaning
CLN8	8MM_CLN	None	20	8mm cleaning
TL8	8MM	NetBackup	0	tl8 backup
DLT	DLT	d_pool	200	dlt backup
TS	8MM	None	0	8mm no pool
<NONE>	DEFAULT	None	0	no barcode
<DEFAULT>	DEFAULT	NetBackup	0	other barcodes

3. Media Manager recognizes that the media ID exists and changes the volume database to reflect the new robotic location, rather than creating a new media ID. The resulting volume attributes for media ID 800021 are as follows:

media ID	800021
media type	8MM cartridge tape
barcode	TL800021
media description	8MM standalone
volume pool	NONE
robot type	TL8 - Tape Library 8MM
robot number	0
robot slot	1

robot host	shark
volume group	EXB220
max mounts allowed	0 (unlimited)

Because the barcode matches the barcode of an existing standalone volume in the configuration, the residence information in the volume database is updated to reflect the new robotic location. Since the volume is not new, barcode rules are ignored.

The only setting used on the **Media Settings** tab is the volume group for added or moved volumes. The media type setting was not used because this example was for a single existing volume that already had a media type.

Example 3: Moving Existing Volumes Within a Robot

The following is an example of moving a volume from one slot to another within the same robot. The robot supports barcodes and the volume has a readable barcode.

Caution For volumes moved within a robotic library, use Update volume configuration only if the robotic library supports barcodes and the volumes have readable barcodes. Otherwise, Media Manager is unable to properly recognize the move (see "When Not to Use Update Volume Configuration" on page 176 and "Example 7: Adding Existing Volumes when Barcodes are Not Used" on page 218).

1. The following are the attributes for media ID 800002, which currently resides in slot 1 of the robotic library.

media ID	800002
media type	8MM cartridge tape
barcode	TL800002
media description	tl8 backup
volume pool	NetBackup
robot type	TL8 - Tape Library 8MM
robot number	0
robot slot	1
robot host	shark
volume group	EXB220
max mounts allowed	0 (unlimited)

2. Assume that you move the volume to empty slot 10, specify the following on the **Media Settings** tab, and then execute the update.

media type	DEFAULT
volume group	EXB220
use barcode rules	NO (not selected)
volume pool	DEFAULT

3. The resulting volume attributes are:

media ID	800002
media type	8MM cartridge tape

barcode	TL800002
media description	tl8 backup
volume pool	NetBackup
robot type	TL8 - Tape Library 8MM
robot number	0
robot slot	10
robot host	shark
volume group	EXB220
max mounts allowed	0 (unlimited)

The updated volume attributes show the new slot number, but all other information is unchanged.

Example 4: Adding New Volumes to a Robot

The following is an example of adding new volumes with barcodes to a robot that supports barcodes. Assume the following:

- The new volume is an 8MM tape with a readable barcode of TL800002.
- There are no media generation rules defined.
- The drives in the robot all have a drive type of 8MM or there are no drives configured on the robot control host.

1. You specify the following on the **Media Settings** tab and execute the update.

media type	DEFAULT
volume group	EXB2220
use barcode rules	YES (selected)
volume pool	DEFAULT

The barcode rules shown in the following table exist:

Barcode Tag	Media Type	Volume Pool	Max Mounts/ Cleanings	Description
CLND	DLT_CLN	None	30	dlt cleaning
CLN8	8MM_CLN	None	20	8mm cleaning
TL8	8MM	NetBackup	0	tl8 backup
DLT	DLT	d_pool	200	dlt backup
TS	8MM	None	0	8mm no pool
<NONE>	DEFAULT	None	0	no barcode

2. The barcode on the media matches the barcode rule named TL8 and the resulting volume attributes for the new volume are as follows:

media ID	800002
media type	8MM cartridge tape
barcode	TL800002
media description	tl8 backup
volume pool	NetBackup
robot type	TL8 - Tape Library 8MM

robot number	0
robot slot	1
robot host	shark
volume group	EXB220
max mounts allowed	0 (unlimited)

The media ID is from the last six characters of the barcode since there are no media ID generation rules. The new residence information in the volume database, shows the robot host, robot type, robot number, slot, and host. The volume group is from the **Media Settings** tab. The volume pool and max mounts allowed are from the barcode rule.

If barcode rules (or barcodes) had not been used, the media description, volume pool, and max mounts allowed would be set to the following defaults:

- Media description: added by Media Manager
- Volume pool: NetBackup for data tapes or None for cleaning tapes
- Max mounts: 0 (unlimited)

Note If the robot does not support barcodes or the barcode is unreadable, you must specify a Media ID prefix (or DEFAULT) on the **Media Settings** tab or Media Manager will not add new media IDs.

Example 5: Adding Cleaning Tapes to a Robot

A special case exists when adding cleaning tapes. For example, assume you are doing an update for a TLD robot.

1. The tapes you inserted include regular tapes with barcodes ranging from DLT00000 to DLT00010 and a cleaning tape with a barcode of CLN001.

   The barcode rules shown in the following table exist:

Barcode Tag	Media Type	Volume Pool	Max Mounts/ Cleanings	Description
CLN	DLT_CLN	None	30	dlt cleaning
DL	DLT	d_pool	200	dlt backup

Barcode Tag	Media Type	Volume Pool	Max Mounts/ Cleanings	Description
<NONE>	DEFAULT	None	0	no barcode

2. You specify the following on the **Media Settings** tab and then execute the update.

media type	DLT
volume group	STK7430
use barcode rules	YES (selected)

3. The barcodes on the regular tapes match the DL barcode rule and the media type of the DL barcode rule matches the Media type on the **Media Settings** tab. These tapes are added as DLT.

   The cleaning tape matches the CLN barcode rule and Media Manager recognizes that DLT_CLN is the cleaning tape for DLT. The cleaning tape CLN001 is added as DLT_CLN type media along with the regular volumes.

   This illustrates Media Manager's ability to add cleaning cartridges along with regular volumes when you use Update volume configuration.

   If the volumes you insert include a cleaning tape, Media Manager adds the volumes correctly if the following are true:

   - The Media type on the **Media Settings** tab is the regular media (DLT in this example).
   - The barcode on the volume matches a barcode tag (CLN in this example).
   - The media type for the barcode rule is the correct cleaning media (DLT_CLN in this example).

   To add only cleaning media, specify the cleaning media type on the **Media Settings** tab and in the barcode rule (DLT_CLN in this example).

Example 6: Moving Existing Volumes Between Robots

When you move volumes from one robot to another and the volumes in both robots are in the same volume database, you must perform two separate updates.

These updates move the volumes to standalone, as an intermediate step, and then to the new robot. Otherwise, Media Manager is unable to update the entries and you receive an "Update request failed" error.

Caution This procedure assumes that robot 2 is able to read barcodes and the volume has readable barcodes. Otherwise, you will encounter the problem mentioned in "Example 7: Adding Existing Volumes when Barcodes are Not Used" on page 218.

1. Remove the volume from robot 1.

   Insert the volume in robot 2.

2. Perform an Update volume configuration on robot 1.

   This updates the volume attributes to show the volume as standalone.

3. Perform an Update volume configuration on robot 2.

   This updates the configuration to show the volume in robot 2.

Example 7: Adding Existing Volumes when Barcodes are Not Used

Caution This example is *NOT* recommended and is included only to illustrate the undesirable results.

The following is an example of adding an existing standalone volume to a TL4 robot. A TL4 robot supports media inventory (detects media presence), but not barcodes.

1. The following are the attributes for media ID 400021, which already exists as a standalone volume.

media ID	400021
media type	4MM cartridge tape
barcode	----------
media description	4MM standalone
volume pool	None
robot type	NONE - Not Robotic
volume group	NONROB_4MM
max mounts allowed	0 (unlimited)

2. Assume that you insert the volume into the robot, specify the following on the **Media Settings** tab, and then execute the update.

media type	DEFAULT
volume group	00_000_TL4
media ID prefix	C4
volume pool	DEFAULT

3. The resulting volume attributes are:

media ID	C40000
media type	4MM cartridge tape
barcode	----------
media description	Added by Media Manager
volume pool	NetBackup

robot type	TL4 - Tape Library 4MM
robot number	0
robot slot	1
robot host	shark
volume group	00_000_TL4
max mounts allowed	0 (unlimited)

It is *important* to note that Media Manager assigned a new media ID to the volume (C40000). This undesired result occurs if you use Update volume configuration to add volumes that do not have readable barcodes or if the robot does not support barcodes. Without a barcode, Media Manager cannot identify the volume and assumes it is new. The media ID C40000 is generated from the media ID prefix specified on the **Media Settings** tab.

The old media ID (400021) remains in the configuration unchanged. The information for the new media ID (C40000) shows the robotic location, including the robot host, robot type, number, slot, and host. The volume group and volume pool are according to the **Media Settings** tab selections. The max mounts allowed is set to the default (0).

This is an example of a situation where the physical inventory utility should be used. See "Updating the Volume Configuration for Non-Barcoded Media" on page 177.

Rescanning and Updating Barcodes for a Robot

Use the **Rescan/Update Barcodes** command to check the barcodes attached to volumes in a robotic library, and update the Media Manager volume database to agree with the contents of the robotic library.

Note *The Rescan/Update Barcodes command does not apply to volumes in API robot types.*

"Robot Attributes" on page 305 lists the robots that support barcodes.

See the following topics:

- "When to Use Rescan / Update" on page 221
- "When Not to Use Rescan / Update" on page 221
- "Procedure To Rescan / Update Barcodes" on page 221

When to Use Rescan/Update

Use **Rescan/Update Barcodes** only to fill in barcodes that are missing from the Media Manager volume database.

For example, if you added a new volume to your configuration but did not physically insert the volume into the robotic library when the logical volume entry was added, the volume database will not include the barcode. In this case, you can use this command to fill in the missing barcode, provided that the media has since been physically inserted in the robotic library.

When Not to Use Rescan/Update

Do not use **Rescan/Update Barcodes** to correct reports that show a media ID in the wrong slot. In this case, you must do *one* of the following to correct the problem:

- Logically move the volume by selecting a volume and using **Actions** > **Move**.
- Logically move the volume using an Update volume configuration operation. See "Updating the Volume Configuration for a Robot" on page 174.
- Physically move the volume into the correct slot to agree with the volume database.

To obtain an inventory of the robotic library without updating the barcode information in the volume database, select **Show contents** in the Robot Inventory dialog. See "Showing the Contents of a Robot" on page 169 for more information.

Procedure To Rescan/Update Barcodes

▼ To check barcodes and update the volume database

1. In the NetBackup Administration Console, click **Media and Device Management** > **Media** > **Robots**.
2. Select the robotic library that has the volumes that you want to scan and update.
3. In the volume pane, select the volumes.
4. Click **Actions** > **Rescan/Update Barcodes**.

   A dialog appears listing the volumes you selected for the rescan operation.

Select **Start** to continue or **Close**. If you select **Start**, the results of the update are displayed in the output section of the dialog.

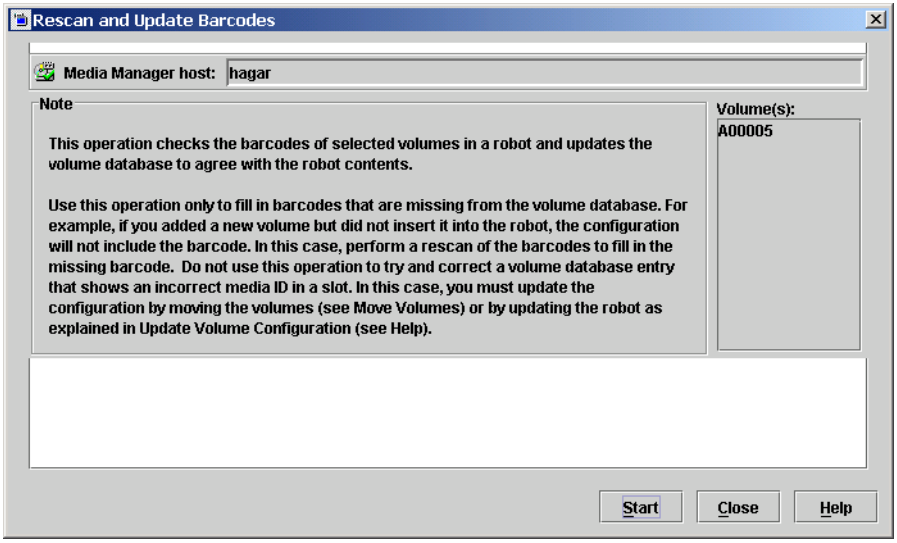

Monitoring Storage Devices 5

The Device Monitor provides menus and commands that are used to manage drives and operator service requests.

This chapter explains the Device Monitor interface and contains the following topics:

- "Starting the Device Monitor" on page 224
- "Using the Device Monitor Window" on page 224
- "Controlling the Media Manager Device Daemon" on page 236
- "Monitoring Devices on Other Servers" on page 237
- "Changing the Operating Mode of a Drive" on page 238
- "Resetting a Drive" on page 240
- "Drive Cleaning Functions" on page 241
- "Adding or Changing a Drive Comment" on page 243
- "Handling Pending Requests and Pending Actions" on page 243
- "Resolving Pending Requests" on page 245
- "Resolving Pending Actions" on page 247
- "Resubmitting Requests" on page 248
- "Denying Requests" on page 249
- "Using The Device Configuration Analyzer" on page 249

The following topic applies only to NetBackup Enterprise Server.

- "Shared Storage Option Summary Reports" on page 250

Starting the Device Monitor

In the NetBackup Administration Console, click **Media and Device Management** > **Device Monitor**. The Device Monitor window similar to the following appears.

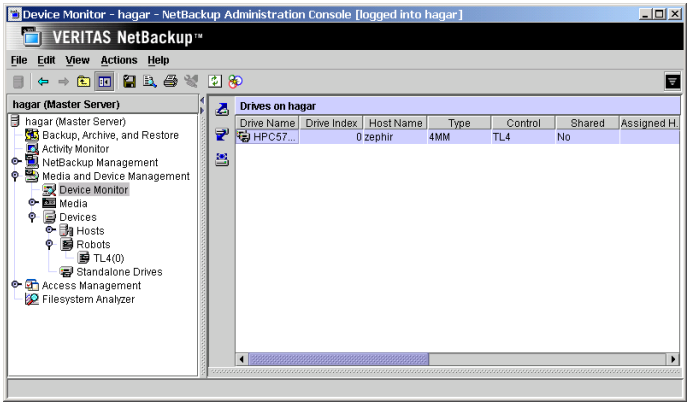

In addition to the tree pane on the left, a pane showing drive information is displayed on the right when you start the Device Monitor.

Also the following panes are displayed on the lower right as needed:

- A pane for pending requests (or pending actions) if there is a pending request or pending action that is active.
- A pane for task messages.

Using the Device Monitor Window

The following topics provide an overview of the Device Monitor window:

- "Menus and Commands" on page 225
- "Toolbars" on page 228
- "Drives Status Pane" on page 228
- "Pending Requests Pane" on page 232
- "Messages Pane" on page 235
- "Shortcut Menus and Commands" on page 235
- "Customizing the Window" on page 235
- "Allowable Media Manager Characters" on page 236

Menus and Commands

The Device Monitor window has available the menus and commands shown in the following table. Review the Note column for any restrictions.

The items on the menus are enabled based on what objects are currently selected in the drive status or pending requests panes. For example if a drive is selected in the drive status pane, **Up Drive** is enabled on the **Actions** menu.

Device Monitor Menus and Commands

Menu	Commands	Note
File	**Change Server** - Displays a dialog that allows you to change to a different NetBackup media server (or SAN media server). See "Monitoring Devices on Other Servers" on page 237 for details **New Window from Here** - Starts another instance of the NetBackup Administration Console node that was active. **Adjust Application Time Zone** - Displays a dialog that allows you to manage the time zone. NetBackup Console can execute in a different time zone than the time zone of the server on which it was initiated. See the NetBackup system administrator's guide for UNIX for more information. **Export** - Saves configuration information or data about the selected device monitor to a file. **Page Setup** - Displays a setup dialog for printing. **Print Preview** - Previews the print image. **Print** - Prints the drive status or pending requests pane (when one of these panes is selected). **Close Window** - Closes the current window. **Exit** - Closes all open windows.	
Edit	**Find** - Command for finding items in the display lists.	
View	Contains commands for specifying your viewing preferences for the Device Monitor, including showing and hiding the toolbar or tree, and refreshing the display. See "Customizing the Window" on page 235.	

Device Monitor Menus and Commands (continued)

Menu	Commands	Note
Actions	**Up Drive** - Sets the operating mode of the drive to up in automatic volume recognition (AVR) mode. This is the normal and default mode for drives. In AVR mode, a robotic library automatically retrieves, mounts, unmounts, and stores volumes. Manual intervention is necessary only when a request causes an error. For standalone drives using labeled volumes, when the volume is mounted and the tape drive is ready, Media Manager automatically reads the recorded media ID and assigns the tape drive. For standalone drives using unlabeled volumes, you assign tape drives to requests using **Actions** > **Assign Request**. **Up Drive, Operator Control** - Sets the operating mode of the drive to up in operator control mode (OPR). This mode is normally used only for security reasons. Do not use this mode for drives that are being used by NetBackup. By default, all operations in this mode are similar to AVR mode. If standalone drive extensions have been disabled (by using the DISABLE_STANDALONE_ DRIVE_EXTENSIONS entry in the NetBackup `bp.conf` file), all operations are similar to AVR mode except that labeled volumes are not automatically assigned to standalone drives. You must assign a standalone drive to a request using **Actions** > **Assign Request**. **Down Drive** - Sets the operating mode of the drive to the DOWN mode, so it is not available to Media Manager. In this mode, drives are not under control of Media Manager and cannot be assigned to requests.	
	When changing the operating mode of drives in SSO configurations, also see "Changing the Operating Mode of a Drive" on page 238.	Applies only to NetBackup Enterprise Server.
	Reset Drive - Resets the specified drive, terminating the drive assignment and taking control away from the assigned user.	
	For SSO configurations the drive is only reset on the device host being managed.	Applies only to NetBackup Enterprise Server.
	For more information, see "Resetting a Drive" on page 240.	

Device Monitor Menus and Commands (continued)

Menu	Commands	Note
	Drive Cleaning - Displays a sub-menu with choices for performing drive cleaning functions.	
	Change Drive Comment - Displays a dialog for changing the comment for the selected drive.	
	For SSO configurations also see "Adding or Changing a Drive Comment" on page 243.	Applies only to NetBackup Enterprise Server.
	Drive Details - Displays a dialog with information about the selected drive, including drive properties, drive status, and robotic library information.	
	Assign Request - Assigns a drive to a pending request.	
	Deny Request - Denies a pending request.	
	Resubmit Request - Resubmits a pending request.	
	Display Pending Action - Displays information about the pending action.	
	Stop/Restart Media Manager Device Daemon - Controls the Media Manager device daemon.	
	Analyze Device Configuration - Starts the configuration analyzer wizard. The analyzer verifies that the settings in your device configuration are consistent and checks for potential problems. See "Using The Device Configuration Analyzer" on page 249.	
	View Status of Shared Drives - Displays a dialog that allows you to display device allocation information about SSO configurations. See "Shared Storage Option Summary Reports" on page 250	Applies only to NetBackup Enterprise Server.
	View SAN Point Control - Launches VERITAS SANPoint Control. This web-based application helps you locate the cause of problems on your SAN or direct fibre-channel attached storage. See "Using SANPoint Control to Investigate SAN Problems" on page 79.	

Device Monitor Menus and Commands (continued)

Menu	Commands	Note
Help	**Help Topics** - Provides online help information for the NetBackup Console. **Troubleshooter** - Helps you to debug errors. **License Keys** - Provides information about your active and registered license keys. **About NetBackup Administration Console** - Displays program information, version number, and copyright information. **Current NBAC User** - Provides NetBackup Access Control information for the current user. Gives the permissions for the user that you are currently logged in as.	

Toolbars

The toolbar buttons of the Device Monitor window provide shortcuts for commands that are on the menus. Also see "Customizing the Window" on page 235.

▼ To show or hide the toolbar buttons

1. In the NetBackup Administration Console, click **Media and Device Management** > **Device Monitor**.
2. Click **View** > **Show Toolbar**.

Drives Status Pane

This pane shows the status of the drives that Media Manager controls on this server. The following table describes the columns displayed in this pane. Check the Note column for any restrictions.

Drives Status Pane

Column	Description	Note
Drive Name	Drive name assigned to the drive during configuration.	
Control	Control mode for the drive can be any of the following:	

Drives Status Pane

Column	Description	Note
	robot_designation. For example, TLD. The robotic daemon managing the drive has connected to ltid (the device daemon and Device Manager service) and is running. The drive is in the usable state. AVR is assumed to be active for the drive, as all robotic drives must be in AVR mode (not OPR mode).	Applies only to robotic drives.
	DOWN-*robot_designation*. For example, DOWN-TLD. The drive is in an usable state because it was downed by an operator or by NetBackup; or when the drive was configured, it was added as a down drive.	Applies only to robotic drives.
	DOWN. In this mode, the drive is not available to Media Manager.	Applies only to standalone drives.
	A drive can be in a DOWN mode because of problems or because it was set to that mode using **Actions** > **Down Drive**.	
	PEND-*robot_designation*. For example, PEND-TLD.	Applies only to robotic drives.
	PEND.	Applies only to standalone drives.
	If the drive reports a SCSI RESERVATION CONFLICT status, this column will show PEND. This status means that the drive is reserved when it should not be reserved. Some server operating systems (Windows, Tru64, and HP-UX) may report PEND if the drive reports Busy when opened. You can use the AVRD_PEND_DELAY entry in the Media Manager configuration file to filter out these reports.	
	AVR. The drive is in a usable state with automatic volume recognition enabled, but the robotic daemon managing the drive is not connected or is not working. Automated media mounts do not occur with a drive in this state (unless the media is in a drive on the system), but the operator can physically mount a tape in the drive or use robtest to cause a tape mount as needed.	Applies only to robotic drives.

Drives Status Pane

Column	Description	Note
	AVR. The drive is running with automatic volume recognition enabled.	Applies only to standalone drives.
	OPR. The drive is running in a secure mode where operators must manually assign mount requests to the drive. avrd is not scanning this drive when in this mode. This mode gives operators control over which mount requests can be satisfied.	Applies only to standalone drives.
	NO-SCAN. A drive is configured for SSO, but has no available scan host (to be considered available, a host must register with a SSO_SCAN_ABILITY factor of non-zero and have the drive in the UP state). NO-SCAN may be caused if all available scan hosts have the drive in the DOWN state. Other hosts (that are not scan hosts) may want to use the drive, but they registered with a scan factor of zero. The drive is unusable by NetBackup until a scan host can be assigned. Use **Actions** > **Drive Details** to view the drive control mode for each host that is sharing this drive.	Applies only to NetBackup Enterprise Server.
	<Mixed>. The control mode for a shared drive may not be the same on all hosts sharing the drive. For shared drives each host can have a different status for the drive. If the control modes *are* all the same, that mode is displayed. Use **Actions** > **Drive Details** to view the drive control mode for each host that is sharing this drive.	Applies only to NetBackup Enterprise Server.
Drive Index	Drive index assigned to the drive during configuration.	
	This column contains <Shared> for shared drives. Use **Actions** > **Drive Details** to view the drive index for each host that is sharing this drive.	Applies only to NetBackup Enterprise Server.
Host Name	The name of the device host that has the drive.	

Drives Status Pane

Column	Description	Note
	This column contains <Shared> for shared drives. Use **Actions** > **Drive Details** to view a list of hosts that are sharing this drive.	Applies only to NetBackup Enterprise Server.
Type	Drive type. Use the contents of this column to find a drive that supports the density required by a request. The valid drive types are as follows: 4MM (4mm cartridge) 8MM (8mm cartridge) 8MM2 (8mm cartridge 2) 8MM3 (8mm cartridge 3) DLT (DLT cartridge) DLT2 (DLT cartridge 2) DLT3 (DLT cartridge 3) DTF (DTF cartridge) HCART (1/2-inch cartridge) HCART2 (1/2-inch cartridge 2) HCART3 (1/2-inch cartridge 3) ODISK (optical disk) QSCSI (1/4-inch cartridge)	
Shared	Yes, means this drive is configured as a shared drive. No, means the drive is not a shared drive.	Applies only to NetBackup Enterprise Server.
Assigned Host	This column shows the device host that currently has the drive assigned. If the selected drive is not assigned, this column is blank.	
User	User ID of the person or application whose request is currently assigned to this drive. If the selected drive is not assigned, this column is blank.	
Media Label	Shows whether a labeled or unlabeled volume is mounted on this drive. Yes, means labeled. No, means unlabeled. Labeled volumes can also be Backup Exec volumes. A dash (-) in this column means there is no volume mounted on the drive.	

Drives Status Pane

Column	Description	Note
Recorded Media ID	ID recorded on the volume mounted on this drive. This identifier is the same as the media ID and should match the external media ID. If no volume or a Backup Exec volume is mounted, this column is blank.	
External Media ID	External ID of the volume mounted on this drive. This identifier should match the recorded media ID. If no volume is mounted, this column is blank.	
Ready	Status of the drive, indicating if it is ready to perform an operation on the loaded volume. Yes, means ready. No, means not ready. See the vendor's manual for the drive for instructions to make it ready, if the drive does not become ready automatically.	
Writable	Shows whether the volume currently mounted on this drive is write-enabled. Yes, in this column means the volume is write-enabled. No, means the volume is write-protected. A dash (-) in this column means there is no volume in the drive.	
Drive Index	Drive index assigned to the drive during configuration.	
	This column contains <Shared> for shared drives. Use **Actions** > **Drive Details** to view the drive index for each host that is sharing this drive.	Applies only to NetBackup Enterprise Server.
Request ID	If this drive is assigned to a request, this column contains the ID of the request.	
Last Cleaned	The date that the drive was last cleaned. If the selected drive has not been cleaned, this column is blank.	
Comment	Comments that have been added for this drive. See "Adding or Changing a Drive Comment" on page 243.	

Pending Requests Pane

This pane shows pending requests (or pending actions) for volumes. These usually originate from NetBackup, but can come from a user or VERITAS Storage Migrator.

This pane is not normally displayed until a pending request or pending action appears. After all requests have been resolved by Media Manager (automatically) or by operator intervention, the Pending Requests pane is again hidden from view. See "Handling Pending Requests and Pending Actions" on page 243 for more information.

The following table describes the columns that are displayed in this pane for a pending request or action.

Pending Requests Pane

Column	Description
Request ID	Identification number for the request or action. This is a system-assigned number that identifies the request. **Note** A pending action is indicated by a media icon depicting a human hand, located to the left of the Request ID.
Host Name	The name of the device host that has the pending request.
User	User ID of the person or application making the request.
Recorded Media ID	Media ID of the volume that is detected when the recorded media label was read It should match the media ID that is in the volume database. The ID consists of up to six alphanumeric characters that are recorded at the beginning of the volume to identify the volume. A volume with a recorded media ID is a labeled volume. Unlabeled volumes do not have recorded media IDs. The recorded and external media IDs should be the same.
External Media ID	External media ID of the volume requested by the user. This ID consists of up to six alphanumeric characters and is usually written on an external label attached to the volume. The external media ID is used to identify the volume.

Pending Requests Pane

Column	Description
Density	Density of the volume required by the user. You must mount the volume on a drive that supports the required density. dlt is the default density. The following is the list of valid densities. To find a drive of the correct type, view the Type column in the drive status list. 4mm (4mm cartridge tape) 8mm (8mm cartridge tape) 8mm2 (8mm cartridge tape 2) 8mm3 (8mm cartridge tape 3) dlt (DLT cartridge tape) dlt2 (DLT cartridge tape 2) dlt3 (DLT cartridge tape 3) dtf (DTF cartridge) hcart (1/2-inch cartridge tape) hcart2 (1/2-inch cartridge tape 2) hcart3 (1/2-inch cartridge tape 3) odiskwm (optical disk-write many) odiskwo (optical disk-write once) qscsi (1/4-inch cartridge tape)
Mode	Specifies whether the volume should be write-enabled. Write in this column means you must write-enable the volume. Read means you do not have to write-enable the volume, unless specified by site policy. To write-enable a cartridge volume, move the tab off the safe position.
Time	Time of day the user made the request for access.
Barcode	Alphanumeric representation of the barcode label on the volume that was requested by the user.
Volume Group	Volume group to which this volume belongs. A volume group defines the volume by location and is a logical group of volumes that are at the same physical location.
Media Description	Describes the media in 25 or less alphanumeric characters. You create the description when you configure volumes.

Messages Pane

The **Messages** pane appears in the lower right below the status of drives pane, and is used to display messages about a task that is running as a background process. This pane is displayed only if there is an informative message or error message for the task. If the task completes normally, the pane is not displayed.

▼ To manage the messages pane

❖ Click one of the icons in the title bar of the pane to minimize, maximize, or close the pane.

Shortcut Menus and Commands

Clicking the right mouse button while the pointer is over a pane or a selection in a pane, displays a shortcut menu with commands that apply to that context. These shortcut commands are also available on the menus or tool bars.

Short Cut Menu

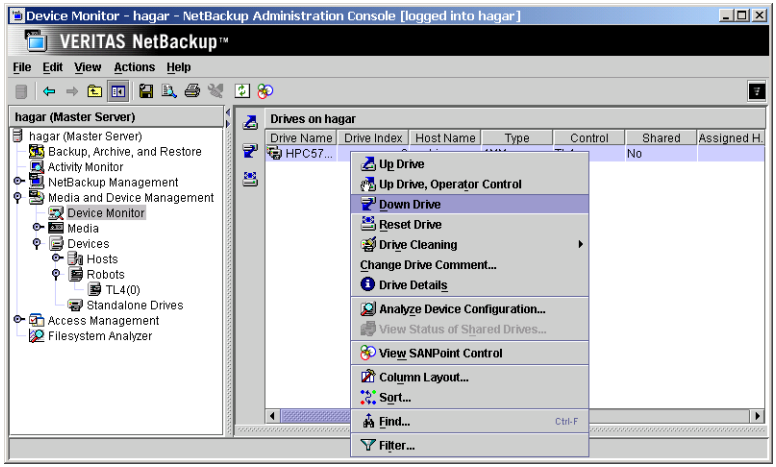

Customizing the Window

The **View** menu has options for sorting and changing the layout and appearance of the panes of the Device Monitor window.

▼ **To show or hide columns, or rearrange the columns**

❖ Click **View** > **Column Layout.**

▼ **To change the screen display refresh rate**

The refresh rate specifies how often the Device Monitor will query device hosts for new drive status information. Initially, screen refresh is enabled and the default rate is 60 seconds.

1. Click **View** > **Options**. > **Device Monitor**.
2. Set the desired refresh rate.

It may be necessary to scroll the Device Monitor window to see any newly arrived jobs after a screen refresh.

To disable screen refresh, unselect **Automatically refresh display every**. The Device Monitor saves the setting of **Automatically refresh display every** when you exit.

Allowable Media Manager Characters

The following set of characters can be used in user-defined names, such as drive comments and drive names that you enter when creating these entities. These characters must be used even when specifying these items in foreign languages.

Do not use a minus as the first character. Spaces are only allowed in a comment for a drive.

- Alphabetic (A-Z a-z)
- Numeric (0-9)
- Period (.)
- Plus (+)
- Minus (-)
- Underscore (_)

Controlling the Media Manager Device Daemon

The Media Manager device daemon must be running on the host being monitored or the lists in the Device Monitor panes will be blank.

If the daemon is not running when you start the Device Monitor, NetBackup prompts you so you can start it at that time.

Note If the device host you want to monitor is a Windows host, this procedure also controls the NetBackup Device Manager service on that Windows host.

▼ **To manage this daemon**

1. In the NetBackup Administration Console, click **Media and Device Management** > **Device Monitor**.
2. Click **Actions** > **Stop/Restart Media Manager Device Daemon**.
3. *This step applies only to NetBackup Enterprise Server.*

   Select a device host. The dialog also shows the current status of this daemon.

   If the device host is known to NetBackup to be a Backup Exec server, the server does not appear in the list.

   The current status field shows the status of this daemon.
4. The dialog allows you to start, stop, or stop / restart the daemon on the host. Select the action you want to perform.
5. Click **OK** or **Apply**.

   You may find it useful to select **Stop** and click **Apply**, and then select **Start** and click **Apply**.

Note *This note applies only to NetBackup Enterprise Server.*
By using **Apply**, you can select device hosts and actions for more than one device host before clicking **OK** to close the dialog.

Monitoring Devices on Other Servers

Initially, you can monitor devices on the server where you are running the Device Monitor. The name of this server is shown at the top of the tree pane. For example: spain (Master Server).

You can also change from the current server to a different master or media server. If you change from a NetBackup Enterprise Server to a NetBackup Server, the functionality available on the new server is limited to the functionality supported by NetBackup Server.

You cannot change from a NetBackup Server to a NetBackup Enterprise Server.

▼ To change to a different master or media server

1. In the NetBackup Administration Console, click the server name shown at the top of the tree.

2. Click **File** > **Change Server**.

3. In the dialog that appears, do one of the following to specify the server that you want to monitor.

   - Enter the name of the server.
   - Select a server from the servers shown in the list.

   You can also click **Remove** to delete a server from the list.

4. Click **OK**.

   The name of the new server appears and the panes in the Device Monitor window change to show device information for the new device host. This information is taken from the global device database for the new server.

   The Media Manager device daemon must be running on the server that you are going to monitor, or the lists in the detail panes will be blank. If it is not running when you attempt to connect, a message box prompts you to start the daemon. Click **OK** in this box.

In addition to using **File** > **Change Server** to monitor devices on other servers, you can specify a different server when logging into NetBackup.

The name of the UNIX server that you specify in the Login box, when starting the NetBackup Administration interface, must be in the NetBackup `bp.conf` file on the remote UNIX host where you want to monitor devices.

If you encounter problems or for more information on remote administration, see the following topics:

- "Remote Administration of Other UNIX Servers" on page 39.
- "Media Manager Security" on page 40.

Changing the Operating Mode of a Drive

It is usually not necessary to change the operating mode of a drive. Drives are set to the UP in AVR mode (the default mode) when you add drives to your configuration, and usually can be left at that setting. Other operating mode settings are used for special purposes.

See the **Actions** menu in "Menus and Commands" on page 225 for an explanation of the operating mode commands.

▼ To change the mode of a drive

1. In the NetBackup Administration Console, click **Media and Device Management** > **Device Monitor**.

2. In the Drives status pane, select a drive or drives.

3. From the **Actions** menu, choose the command for the new operating mode you want (**Up Drive**, **Down Drive,** or **Up Drive, Operator control**).

4. *This step applies only to NetBackup Enterprise Server.*

   If the drive is a shared drive (SSO option), the dialog contains a list of the hosts that are sharing the selected drive. You can choose any number of hosts where the mode change will apply.

Changing Mode Example

This example shows the results of changing the operating mode of a drive from AVR to DOWN. See the table in "Drives Status Pane" on page 228 for an explanation of the columns in the drive status display.

Note Some columns of the drive status list are not shown in this example.

The following display shows the Drives status pane *before* changing the drive mode. Notice that the Control column contains AVR and the Ready column contains Yes.

Drive Name	Type	Control	Recorded Media ID	External Media ID	Ready	Writable	Request ID
STK9840A-FC-1	HCART	AVR	000084	000084	Yes	Yes	0

The following display shows the Drives status pane *after* using **Actions** > **Down Drive** to change the operating mode of the drive to DOWN. Notice that the Control column contains DOWN and the Ready column now contains No.

Drive Name	Type	Control	Recorded Media ID	External Media ID	Ready	Writable	Request ID
STK9840A-FC-1	HCART	DOWN			No	-	-

Resetting a Drive

Caution Do not reset an assigned drive unless directed by site policy or the system administrator. Terminating an active job can destroy user data.

Resetting a drive changes the state of the drive. The actions that result from resetting a drive depend on the original state of the drive as follows:

Original Drive State	Reset Action
DOWN	Media Manager attempts to unload the drive. This occurs for standalone drives, as well as drives in a robot.
UP state, not assigned to a user or application, and in a ready state	Media Manager attempts to unload the drive. If the drive is not ready, no action occurs.
UP state and assigned to a user or application	Media Manager removes the tape. This takes control away from the user.

Use the reset capability with caution. A situation where resetting a drive might be necessary is if a system problem causes the drive to remain assigned after a job is complete. In this case, the drive cannot be used for another request and the only way to regain control of the drive is to reset it.

Note Resetting a drive does not perform any SCSI bus or SCSI device resets.

▼ To reset a drive

1. In the NetBackup Administration Console, click **Media and Device Management** > **Device Monitor**.
2. In the Drives status pane, select a drive or drives.
3. Click **Actions** > **Reset Drive**.
4. Verify that the assignment was terminated by checking that the User and Request ID columns are blank for the drive number you selected.

Drive Cleaning Functions

See "Drive Cleaning" on page 332 for background information on types of drive cleaning and cleaning tapes.

Note You can also perform drive cleaning functions from the Devices node. If you are managing the cleaning frequency from the Devices node, `ltid` must be stopped and restarted for any changes to take effect. This action also stops and restarts any robotic processes. For the functions available from the Devices node, see "Drive Cleaning Functions" on page 73.

▼ To perform drive cleaning functions

1. In the NetBackup Administration Console, click **Media and Device Management** > **Device Monitor**.

2. In the Drives status pane, select a drive.

3. Select **Actions** > **Drive Cleaning**.

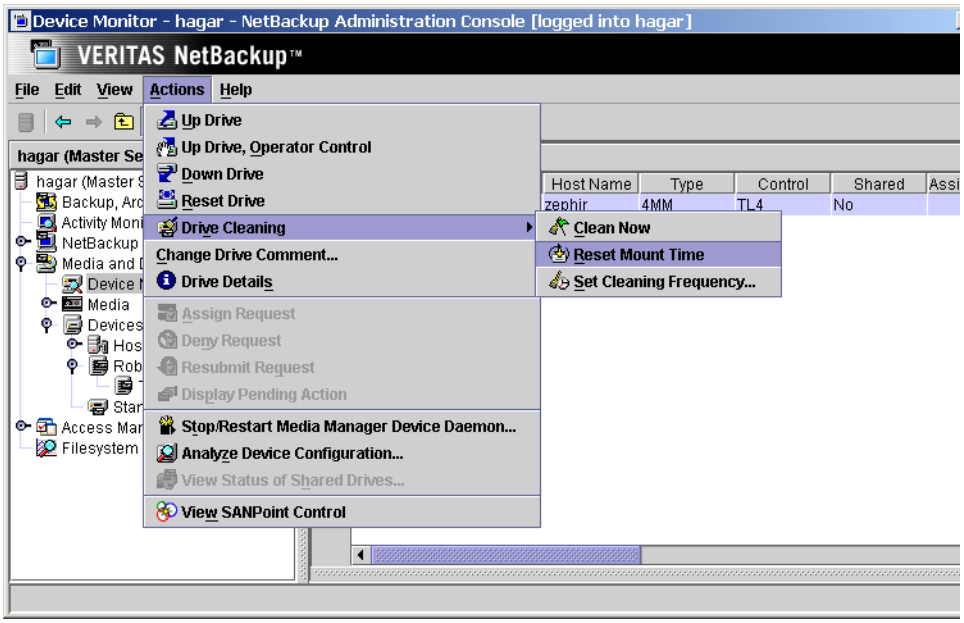

The sub-menu choices allow you to perform the following functions:

Select	To	Note
Clean Now	Start an operator-initiated cleaning of the selected drive, regardless of the cleaning frequency or accumulated mount time. If the drive is a standalone drive, it must contain a cleaning tape and a mount request will be issued. **Clean Now** resets the mount time to zero, but the cleaning frequency value remains the same.	
	For a shared drive (SSO option), the dialog contains a list of the hosts that are sharing the selected drive. You can choose only one host where **Clean Now** will apply.	Applies only to NetBackup Enterprise Server.
Reset Mount Time	Reset the mount time for the selected drive to zero. Use **Reset Mount Time** to reset the mount time after doing a manual cleaning of a drive.	
	For a shared drive (SSO option), the dialog contains a list of the hosts that are sharing the selected drive. You can choose any number of hosts where **Reset Mount Time** will apply.	Applies only to NetBackup Enterprise Server.
Set Cleaning Frequency	Set the desired number of mount hours between each drive cleaning. **Set Cleaning Frequency** is not available for robots that do not support frequency-based cleaning.	
	Set Cleaning Frequency is not available for a shared drive (SSO option).	Applies to NetBackup Enterprise Server

4. Updated drive cleaning information is presented in the Drive Details dialog.

Note The **Clean Now** function may take several minutes to complete, so the cleaning information in the Drive Details dialog may not be updated immediately.

Adding or Changing a Drive Comment

▼ **To change a drive comment**

1. In the NetBackup Administration Console, click **Media and Device Management** > **Device Monitor**.
2. In the Drives status pane, select a drive or multiple drives.
3. Click **Actions** > **Change Drive Comment**.

   The dialog shows the current comment (if any).
4. *This step applies only to NetBackup Enterprise Server.*

   If the drive is a shared drive (SSO option), the dialog contains a list of hosts that are sharing the selected drive and the current drive comment for each host. You can choose the hosts where a drive comment will apply.
5. Enter a comment or change the comment.
6. Click **OK**.

Handling Pending Requests and Pending Actions

In normal operating situations, NetBackup is able to resolve most requests automatically and quickly. For example if the requested volume is labeled and in a robotic library, Media Manager resolves the request as soon as the volume and a drive are available; and then removes the request and also the Pending Requests pane. In these normal cases, the pending request may not even be apparent to the operator.

The following special situations can occur:

- NetBackup needs a volume to complete a tape mount. NetBackup then displays a pending request in the Pending Requests pane.

  See “Pending Requests” on page 244.
- NetBackup needs a volume to complete a tape mount and encounters problems. NetBackup then displays a pending action in the Pending Requests pane.

  See “Pending Actions” on page 244.

Pending Requests

NetBackup sometimes needs operator assistance to complete a tape mount request for standalone drives or for drives in a robot that are not working (indicated by AVR in the Control column of the drive status pane).

In these cases, NetBackup is unable to automatically complete the request and is not certain what is causing the issue, since there may be multiple valid explanations for the problem.

The request remains in the Pending Requests pane until resolved. In any of the following cases, proceed as explained in "Resolving Pending Requests" on page 245.

- The required drive is up and is in operator control mode (OPR mode) and standalone drive extensions were disabled by using a DISABLE_STANDALONE_DRIVE_EXTENSIONS entry in the `bp.conf` file on UNIX servers or in the registry on Windows servers.
- The volume in a drive is unlabeled (and the volume being mounted is not known to be a Backup Exec volume that you are managing).
- NetBackup issues a write request for an unlabeled volume in a standalone drive and the standalone drive extensions were disabled.

The following figure shows a typical pending request.

Note Some columns of the pending requests pane are not shown in this figure.

horseradish : 1 Pending Request.

Request ID	Recorded Media ID	External Media ID	User	Density	Mode	Time	Barcode	Volume Group
0	000084	000084	root	hcart	R	2/4/2003 3:49:32 PM	--------	---

See the table in "Pending Requests Pane" on page 232 for an explanation of the columns in a pending request display.

Pending Actions

Media Manager also needs operator assistance to complete a tape mount request if the mount request encounters an error. These types of pending requests are known as pending actions and usually occur with drives in robotic libraries.

A pending action is similar to a pending request and is identified by a media icon (the icon has a human hand on it depicting that a manual action is required), located to the left of the request ID.

In these cases, NetBackup is certain what can be causing the issue and can issue instructions to the operator needed to resolve the action. Pending actions must be resolved before proceeding. See "Resolving Pending Actions" on page 247.

Note The following figure shows a typical pending action on a Windows server. Some columns of the pending requests pane are not shown in this example.

ainew2k : 1 Pending Request.

Request ID	Recorded Media ID	External Media ID	User	Density	Mode	Time	Barcode	Volume Group
*0	000062	000062	NetBackup	hcart	R	2/5/2003 1:01:23 PM	000062	00_000_TLD

See the table in "Pending Requests Pane" on page 232 for an explanation of the columns in a pending action (or pending request) display.

Resolving Pending Requests

▼ To assign a drive to a pending request

1. In the NetBackup Administration Console, click **Media and Device Management** > **Device Monitor**.

2. In the Pending Requests pane, select the request. Also, note the contents of the following columns of the request:

Check this Column	To Determine
Density	The recording density that is required.
External Media ID	The ID of the media that is required.
Mode	Whether the volume should be write-enabled.

3. In the Drives status pane do the following:

   a. Find a drive type that matches the density for the pending request.

   See the table in "Pending Requests Pane" on page 232 for a list of the densities that each drive type supports.

   b. Check that the drive is up and not assigned to another request.

   c. Select the drive.

Note *This note applies only to NetBackup Enterprise Server.*
Ensure that the drive and the pending request are on the same host.

4. If necessary, get the media, write-enable it, and insert it into the drive.

5. Wait for the drive to become ready, as explained in the vendor's drive equipment manual.

6. Click **Actions** > **Assign Request**.

   Verify that the request is cleared from the Pending Requests pane.

7. In the Drives status pane, verify that the job request ID appears in the Request ID column for the drive *and* that the User column is not blank.

Resolving a Pending Request Example (Drive in AVR mode)

In this example, the drive is up under Automatic Volume Recognition control mode (the drive is a standalone drive or is a drive in a robot that is not working) as indicated by AVR in the Control column.

In this case, Media Manager can assign a drive automatically (which it does when the drive is in AVR mode, providing the recorded media ID on the volume header matches the media ID for the request). Since the volume is labeled, you *do not* have to assign the drive using **Actions** > **Assign Request**.

See the tables in "Drives Status Pane" on page 228 and "Pending Requests Pane" on page 232 for an explanation of each column in the drive status and the pending requests panes.

Note Some columns of the drive status and pending requests panes are not shown in this example.

1. The following pending request is displayed:

horseradish : 1 Pending Request.

Request ID	Recorded Media ID	External Media ID	User	Density	Mode	Time	Barcode	Volume Group
0	000084	000084	root	hcart	R	2/4/2003 3:49:32 PM	--------	---

   The first task is to find an available tape drive for the request. The request specifies a recording density of hcart. This means that you need a 1/2 inch cartridge tape drive.

2. Check the Drives status pane for an appropriate tape drive.

1 Drive : (0 Active 0 Down)

Drive Name	Type	Control	Recorded Media ID	External Media ID	Ready	Writable	Request ID	User
STK9840A-FC-1	HCART	AVR			Yes	Yes	-	

STK9840A-FC-1 is a 1/2 inch cartridge drive and is available, since the control mode is not down and there is not a request number in the Request ID column.

3. Locate the volume with the external media ID of 000084. Depending on your site's use of the Volume Group column, the volume group name may give an indication of where this media is located.

4. Insert the volume into the drive. Assume that the tape drive is on and ready to receive the volume. Also, assume that when you insert the volume, the tape drive loads and positions the tape to the load point.

5. Check the Drives status pane again to verify that the drive has been assigned to request ID 0. The following display shows that STK9840A-FC-1 is now assigned to request 0, which is the request to write information on the labeled volume 000084.

1 Drive : (1 Active 0 Down)

Drive Name	Type	Control	Recorded Media ID	External Media ID	Ready	Writable	Request ID	User
STK9840A-FC-1	HCART	AVR	000084	000084	Yes	Yes	0	root

The write operation will now proceed and the pending request will be removed. When the operation is complete, NetBackup or the `tpunmount` command will request Media Manager to release the drive and the drive will be available for other requests.

Resolving Pending Actions

▼ To resolve a pending action

1. In the NetBackup Administration Console, click **Media and Device Management** > **Device Monitor**.

2. In the Pending Requests pane, select the pending action.

Note The following figure shows a pending action on a Windows server.

ainew2k : 1 Pending Request.

Request ID	Recorded Media ID	External Media ID	User	Density	Mode	Time	Barcode	Volume Group
*0	000062	000062	NetBackup	hcart	R	2/5/2003 1:01:23 PM	000062	00_000_TLD

3. Click **Actions** > **Display Pending Action** (or double-click on the pending action).

This opens a message box with a description of the problem and a list of possible actions to correct the problem. The message box also shows other information, such as user name, recorded media ID, external media IDs, and drive number.

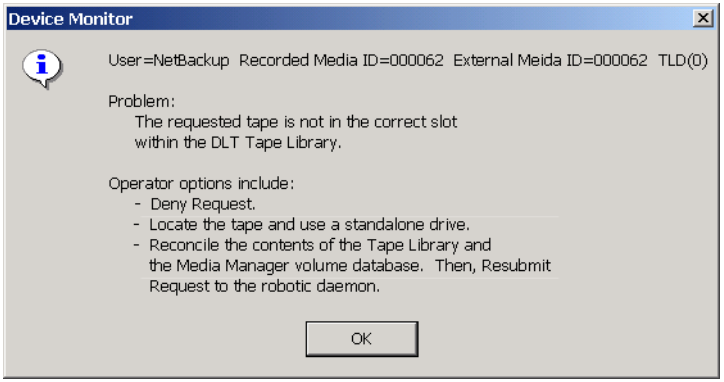

Click **OK** after viewing the information about the pending action.

4. In most cases, you can do either of the following actions to resolve the action:

   a. Correct the error condition and resubmit the request. See "Resubmitting Requests" on page 248.

   or

   b. Click **Actions** > **Deny Request** to deny the request. See "Denying Requests" on page 249.

Resubmitting Requests

▼ To resubmit a request

1. In the NetBackup Administration Console, click **Media and Device Management** > **Device Monitor**.

2. Correct the problem identified by the pending action message.

3. In the Pending Requests pane, select the request.

4. Click **Actions** > **Resubmit Request**.

   The pending action message is removed from the Pending Requests pane and the operation proceeds.

▼ To resubmit a request for a missing volume

For example, a volume was requested after being removed from a robotic library and the volume must be located.

1. Locate the missing volume.
2. Insert the volume in the robotic library.
3. Perform an Update Volume Configuration.

   See "Updating the Volume Configuration for a Robot" on page 174 for complete instructions.

4. Resubmit the request.

Denying Requests

Some situations may require you to deny requests for service (for example, when drives are not available, you cannot find the volume, or the user is not authorized to use it). Denying a request returns an error message to the user.

▼ To deny a request

1. In the NetBackup Administration Console, click **Media and Device Management** > **Device Monitor**.
2. In the Pending Requests pane, select the request.
3. Click **Actions** > **Deny Request**.

The request is removed from the Pending Requests pane.

Using The Device Configuration Analyzer

This wizard verifies that the settings in your device configuration are consistent and checks for potential configuration problems. This wizard can be used for regular and SSO device configurations.

Learning More About the Device Analyzer

You can obtain information about this wizard before you start using it. This help includes what to expect in the wizard, what the wizard checks, and also troubleshooting topics for regular and shard drive configurations.

▼ **To learn about this wizard**

1. Start the wizard (see "Starting the Device Analyzer" on page 250).
2. From the welcome screen of the wizard, click **Help**.
3. When you are finished reviewing the help information in the wizard, exit the help and click **Cancel** to exit the wizard.

Starting the Device Analyzer

You can also start the analyzer from the **Completing the Shared Drive Wizard** screen of the Shared Drive wizard or the **Devices** node.

▼ **To start the analyzer**

1. In the NetBackup Administration Console, click **Media and Device Management** > **Device Monitor**.
2. Click **Actions** > **Analyze Device Configuration**.

Shared Storage Option Summary Reports

This is a NetBackup Enterprise Server topic.

These two reports contain Media Manager information about your SSO configuration and include the following information about the drives and hosts.

This Report	Contains the Following SSO Information
Shared Drive Summary	Drive name, device allocation host, the number of registered hosts, drive reservation status, hosts reserving this drive, and the current scan host.
Device Allocation Host Summary	The device allocation host, host name of the registered host, the number of registered and reserved drives, availability status, the scan ability factor, and scanning status.

See "Shared Storage Option (SSO) Topics" on page 269 for background, installation, configuration, and verification information for shared drives.

▼ To view summary reports

1. In the NetBackup Administration Console, click **Media and Device Management** > **Device Monitor**.
2. Click **Actions** > **View Status of Shared Drives**.
3. In the **Status of Shared Drives** dialog, select a device allocation host (or hosts) from the list.
4. Use **Add >>** to move the host to the list of hosts that will be scanned.
5. Click **OK**.

   The **Shared Drive Summary** and **Device Allocation Host Summary** appear in the two lower panes of the dialog.

Managing the Media Manager Daemons 6

This chapter includes the following Media Manager daemon topics:

- Overview of Media Manager Daemons
- Media Manager Device Daemon (ltid)
- Automatic Volume Recognition Daemon (avrd)
- Media Manager Volume Daemon (vmd)
- Robotic Daemons
- Displaying Process Status using the vmps Script
- Logging of Errors

Overview of Media Manager Daemons

The following daemons manage the assignment and scanning of devices:

- `ltid` - The Media Manager device daemon.
- `avrd` - The automatic volume recognition daemon.
- `vmd` - The Media Manager volume daemon enables remote device management and controls the volume database. This daemon informs `ltid` of the location of requested volumes, and tracks the number of mounts and last mount time for each volume.

Robotic Daemons and Robotic Control Daemons

A Media Manager robotic daemon (and possibly a robotic control daemon) exist for each robot that you configure on a host where Media Manager is installed.

Every host that has a drive in a robot, has a robotic daemon for that robot. The robotic daemon receives requests from the Media Manager device daemon and sends necessary information directly to the robotics or to a robotic control daemon.

Library Sharing (or Robot Sharing)

This is a NetBackup Enterprise Server topic.

Robotic control daemons also exist for robot types where drives can optionally attach to hosts other than the host with direct robotic control.

For example, each drive in a Tape Library DLT (TLD) robot can be attached to a different host and each host would have a `tldd` daemon. The robotics are controlled by a single host and only that host has the robotic control daemon, `tldcd` installed. This is true even when the robotic control path could be available on multiple hosts in a Shared Storage Option configuration.

When it is necessary to mount a tape, the robotic daemon on the host with the drive sends control information to the robotic control daemon on the host controlling the robotics.

The following figure shows the daemons for a Tape Library DLT robot. In this figure note the following points:

- Each host connects to one drive and has a robotic daemon, `tldd`.
- The robotic control and the robotic control daemon, `tldcd`, is on Host A.

The Media Manager device daemons on host A and B start `tldd`. The `tldd` daemon on Host A also starts `tldcd`. Requests to mount tapes from host B go to `tldd` on Host B, which then sends the robotic command to `tldcd` on Host A.

Example TLD Robot and Host Configuration

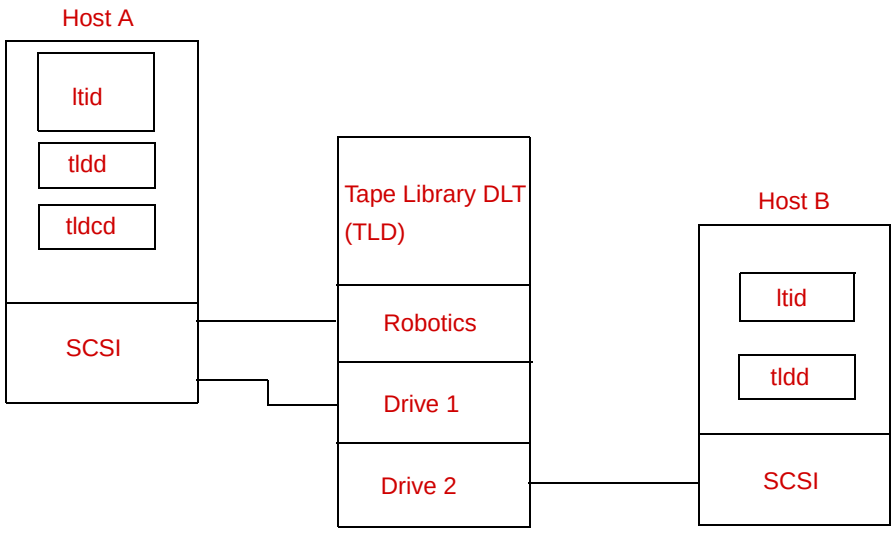

Media Manager Device Daemon (ltid)

`ltid` is the interface between Media Manager commands and device control. `ltid` controls the reservation and assignment of volumes and optical disks. When a tape request is issued, `ltid` requests `vmd` to find the volume and then requests the appropriate robot to mount the volume. If necessary, `ltid` notifies the operator that the volume must be mounted manually.

Starting the Device Daemon

Starting `ltid` also starts `avrd`, `vmd`, and the daemons for any robots with defined drives.

▼ To start ltid from a command line

❖ Enter `/usr/openv/volmgr/bin/ltid`.

To start `ltid` and the robotic daemons in verbose mode and log debug information through `syslogd`, use the `-v` option. This option should only be used when needed for debugging, since it can use large amounts of disk space to save extra information.

▼ To start ltid from the NetBackup Administration Console

1. Use **Actions** > **Stop/Restart Media Manager Device Daemon**.

2. *This step applies only to NetBackup Enterprise Server.*

   In the dialog, the button to the right of the **Device Host** box allows you to select a device host. The Current Status box shows the status of this host.

   Select a host.

3. Select **Start** and **OK**, when ready. This also starts the daemons for any robot that is configured.

Stopping the Device Daemon

Stopping `ltid`, also stops robotic daemons, but `vmd` continues to run.

Note *This note applies only to NetBackup Enterprise Server.*
The ACS robotic processes (acsssi and acssel) also continue to run, since they are used by the ACS test utility and do not normally need to be stopped.

▼ **To stop ltid from the NetBackup Administration Console**

1. Notify users and operators that the system will be unavailable.
2. Check the Pending Requests list to ensure that no tapes are currently assigned. If any tapes are assigned, you cannot stop the daemons.
3. Use **Actions** > **Stop/Restart Media Manager Device Daemon**.
4. *This step applies only to NetBackup Enterprise Server.*

   In the dialog, the button to the right of the **Device Host** box allows you to select a device host. The Current Status box shows the status of this host.

   Select a host.
5. Select **Stop** and **OK**.

Automatic Volume Recognition Daemon (avrd)

This daemon handles automatic volume recognition and label scanning. This allows Media Manager to read labeled tape and optical disk volumes and assign the associated removable media requests to drives.

`avrd` is started when you start `ltid` and stops when you stop `ltid`. You do not have to start and stop it at any other times.

Media Manager Volume Daemon (vmd)

When `vmd` receives information from `ltid` about a requested volume, it searches the volume database and returns the robotic location of the volume to `ltid`. Because `vmd` may be running on or servicing requests from another system, and because it is used for remote device configuration and device management, `vmd` continues to run even after `ltid` and the other daemons have been stopped.

`vmd` must be active to change the volume configuration.

▼ **To start vmd**

This action also starts `vmd`

❖ Start `ltid`.

▼ **To start only vmd**

❖ Enter `/usr/openv/volmgr/bin/vmd`.

▼ **To stop vmd**

❖ Enter `/usr/openv/volmgr/bin/vmctrldbm -t`.

The following point applies only to NetBackup Enterprise Server.

An additional function that `vmd` can provide is to be the device allocator (`DA`) for shared drives. In this case, `vmd` is known as `vmd/DA`.

Robotic Daemons

The following table lists the robotic daemons and robotic control daemons (if applicable) for each robot type. For more information about these daemons, see the NetBackup Commands for UNIX reference guide.

Robotic and Robotic Control Daemons

Robot	Daemon	Description	Note
Automated Cartridge System (ACS)	acsd	This daemon runs on a Media Manager server and communicates mount, unmount, and robot inventory requests to the ACS Storage Server Interface process. This process communicates with the ACS library software server that controls the ACS robotics.	Applies only to NetBackup Enterprise Server.
Library Management Facility (LMF)	lmfd lmfcd	The robotic daemon (lmfd) resides on a Media Manager server and passes mount and dismount requests to the LMF robotic control daemon (lmfcd). `lmfcd` receives mount or dismount requests from `lmfd` or robot inventory requests through an external socket interface. This daemon must reside on a host that is running the LMF Server or the LMF Client.	Applies only to NetBackup Enterprise Server. LMF is supported only on UNIX servers.

Robotic and Robotic Control Daemons (continued)

Robot	Daemon	Description	Note
Optical Disk Library (ODL)	odld	This daemon runs on a Media Manager server that has an Optical Disk Library. odld receives requests to mount and unmount volumes, or for robot inventory, and communicates these requests to the robotics through a SCSI interface.	ODL is supported only on UNIX servers.
Tape Library DLT (TLD)	tldd tldcd	The robotic daemon (tldd) runs on each Media Manager server that has a drive in a Tape Library DLT. This daemon receives requests to mount and unmount volumes and sends these requests to the robotic control daemon (tldcd). tldcd runs on the Media Manager server that has the robotic control, accepts mount, dismount, and robot inventory requests and communicates with the Tape Library DLT robotics through a SCSI interface.	
		Drives in the same robot may be configured on different hosts.	Applies only to NetBackup Enterprise Server.
Tape Library 4MM (TL4)	tl4d	This daemon runs on a host that has a Tape Library 4MM. tl4d receives requests to mount and unmount volumes, or for robot inventory, and communicates these requests to the robotics through a SCSI interface.	
Tape Library 8MM (TL8)	tl8d tl8cd	The robotic daemon (tl8d) runs on each Media Manager server that has a drive in a Tape Library 8MM. This daemon receives requests to mount and unmount volumes and sends these requests to the robotic control daemon (tl8cd). tl8cd runs on the Media Manager server that has the robotic control, accepts mount, dismount, and robot inventory requests and communicates with the Tape Library 8MM robotics through a SCSI interface.	

Robotic and Robotic Control Daemons (continued)

Robot	Daemon	Description	Note
		Drives in the same robot may be configured on different hosts.	Applies only to NetBackup Enterprise Server.
Tape Library Half-inch (TLH)	tlhd tlhcd	The robotic daemon (tlhd) runs on each Media Manager server that has a drive in a Tape Library Half-inch. This daemon receives requests to mount and unmount volumes and sends these requests to the robotic control daemon (tlhcd). tlhcd runs only on the Media Manager server that has the robotic control, receives mount or dismount requests from tlhd, and communicates with the IBM Automated Tape Library Software, which controls a library, such as an IBM 3494.	Applies only to NetBackup Enterprise Server.
Tape Library Multimedia (TLM)	tlmd	This daemon runs on a Media Manager server and communicates mount, unmount, and robot inventory requests to an ADIC DAS/SDLC server, which controls the robotics, such as a Grau Automated Media Library (AML).	Applies only to NetBackup Enterprise Server.
Tape Stacker 8MM (TS8)	ts8d	This daemon runs on a Media Manager server that has a Tape Stacker 8MM. ts8d receives requests to mount and unmount volumes, or for robot inventory, and communicates these requests to the robotics through a SCSI interface.	
Tape Stacker DLT (TSD)	tsdd	This daemon runs on a Media Manager server that has a Tape Stacker DLT. This daemon receives requests to mount and unmount volumes, or for robot inventory, and communicates these requests to the robotics through a SCSI interface.	

Robotic and Robotic Control Daemons (continued)

Robot	Daemon	Description	Note
Tape Stacker Half-inch (TSH)	tshd	This daemon runs on a Media Manager server that has a Tape Library Half-inch. tshd receives requests to mount and unmount volumes, or for robot inventory, and communicates these requests to the robotics through a SCSI interface.	

Starting and Stopping Robotic Daemons

Starting `ltid` (the device daemon) also starts the robotic daemons for all configured robots. Stopping `ltid` also stops robotic daemons.

Once started, a robotic daemon can be in an UP or DOWN state. When a connection is made to the appropriate robot, the corresponding daemon is in the UP state and can mount or unmount tapes (or platters). If the connection cannot be made or if errors exist, the daemon moves to the DOWN state. Even in the DOWN state, the daemon is still running and automatically returns to the UP state when the connection is made or problems no longer exist.

The following point applies only to NetBackup Enterprise Server.

The ACS robotic processes (`acsssi` and `acssel`) continue to run, since they are used by the ACS test facility and do not normally need to be stopped.

▼ To start robotic daemons in verbose mode

❖ Use the `-v` option on the command for the daemon or start `ltid` with the `-v` option.

This option logs debug information through the system log and should only be used when required for debugging, since it can use large amounts of disk space to log the extra information.

▼ To start robotic daemons independently of ltid

❖ Enter `/usr/openv/volmgr/bin/`*daemon_name* `[-v] &`.

▼ To stop a robotic daemon without stopping ltid

1. Determine the process ID for the daemon using the `vmps` script.
   `/usr/openv/volmgr/bin/vmps | grep` *daemon_name*.

   See “Displaying Process Status using the vmps Script” on page 261” for information on using this script.

2. Use the `kill` command with the process ID from step 1.

   `kill` *daemon_pid_#*.

▼ To stop robotic control daemons

Use one of the following commands. You can also stop these daemons using the `kill` command.

- ❖ `/usr/openv/volmgr/bin/lmfcd -t`.
- ❖ `/usr/openv/volmgr/bin/tl8cd -t`.
- ❖ `/usr/openv/volmgr/bin/tldcd -t`.
- ❖ `/usr/openv/volmgr/bin/tlhcd -t`.

The following command applies only to NetBackup Enterprise Server.

- ❖ `/usr/openv/volmgr/bin/lmfcd -t`.

Displaying Process Status using the vmps Script

The `vmps` script shows the Media Manager daemon processes that are active. You can execute this script using the following command:

`/usr/openv/volmgr/bin/vmps`

In the following sample display, the second column contains the process IDs for the processes.

```
root       303  0.0  0.2  136  264 ?  S    Feb 11  4:32 ltid -v
root       305  0.0  0.0  156    0 ?  IW   Feb 11  0:54 vmd -v
root       306  0.0  0.0  104    0 ?  IW   Feb 11  0:15 tl8d -v
root       307  0.0  0.0   68   56 ?  S    Feb 11 12:16 avrd
root       310  0.0  0.0  116    0 ?  IW   Feb 11  0:07 tl8cd -v
```

Logging of Errors

Robotic errors and network errors are logged using `syslogd`. See the NetBackup troubleshooting guide for more information.

Tape I/O Commands 7

If you are not using NetBackup or Storage Migrator, or you want to troubleshoot or test Media Manager, you can manually request Media Manager to mount and remove specific volumes by using the commands found in this chapter.

This chapter includes the following topics:

- Requesting Tapes
- Reading and Writing Tape Files
- Removing Tape Files
- Using an Optical Disk
- External Access to Media Manager Controlled Devices
- User Error Messages

Requesting Tapes

The `tpreq` command allows you to request a tape of a particular density and specify various options, such as the access mode. This command reserves a single drive and creates a file in the current working directory (unless a full path is specified). The file acts as a symbolic link to the tape and all subsequent access to the tape is through this file name. Users do not have to be concerned with the full path to a specific device file.

The information you supply on the `tpreq` command is required for use by the Media Manager device daemon and used to validate all access requests to the tape file.

For all types of tapes, the tape is actually mounted and assigned when you enter the `tpreq` command.

By default, the drive assigned is one which supports DLT cartridge tapes, using the density dlt. You can use the density option on `tpreq` to request a drive that supports another density. See the Density field in the table in "Pending Requests Pane" on page 232 for a list of supported densities and drive types.

The density for the physical write is not selected automatically on drives. It is requested, so an operator can satisfy the correct drive. Density is determined by the `/dev` device name that was used when the drive was added to the Media Manager configuration or by the buttons selected on the drive.

A `tpreq` command must include a media ID and a file name. If the tape volume is associated with a volume pool (configured using Media Manager), the name of the volume pool must also be specified using the -p parameter.

See `tpreq` in the NetBackup commands for UNIX reference guide for more information.

drive_mount_notify Script

When a `tpreq` command is executed, a call is made to execute the `drive_mount_notify` script immediately after the media has been successfully placed in a pre-selected drive.

This script allows user special-handling to occur at this point. Control is then returned to NetBackup to resume processing. The script is only called from the `tpreq` command for drives that are in robots and is not valid for standalone drives.

This script is located in the `/usr/openv/volmgr/bin/goodies` directory. If you wish to use this feature, this script should be activated and put into the `/usr/openv/volmgr/bin` directory.

Usage information is documented within the script.

tpreq Example

The following sample `tpreq` command reserves a tape drive and creates a symbolic tape file:

```
/usr/openv/volmgr/bin/tpreq -f tape1 -m jlr01 -a w -d qscsi
```

This command creates a file named tape1in the current working directory and links the file to the drive containing the tape volume having the media ID of JLR01. The access mode for the tape file is set to write and a 1/4-inch cartridge drive is assigned.

Reading and Writing Tape Files

Reading or writing tape files involves copying the file from tape to disk or from disk to tape. To perform read or write operations, use one of the UNIX commands that performs input/output operations, for example `tar` or `mt`.

Positioning Tape Files

The `mt` command positions tape files by skipping forward or backward according to tape marks. The following table shows the options available on the `mt` command for positioning tapes and how they affect tape files.

mt Option	Operation
`eof`, `weof`	Writes end-of-file tapemarks at the current position on the tape according to the count option on `mt`.
`fsf`, `bsf`	Spaces forward or backward the number of tapemarks on the count option.
`fsr`, `bsr`	Spaces forward and backward the number of records according to the count option on `mt`. `bsr` is only supported for the undefined record type.

The following example uses `mt` to skip forward three files on a tape:

```
mt -f tape1 fsf 3
```

Rewinding Tape Files

When a file is rewound, it is positioned to the beginning of the data. To rewind a tape file, you can use the `mt` command.

The following command causes rewinding of tape file `tape1`. `tape1` is positioned to the beginning of the tape volume associated with the file:

```
mt -f tape1 rewind
```

The count option is not used for the rewind operation. If a count is specified, it is ignored.

Removing Tape Files

When you have completed reading or writing tape files, use the `/usr/openv/volmgr/bin/tpunmount` command to end the assignment of the tape file. This command removes from the directory the tape file you created using `tpreq` and causes the tape volume to be removed from the tape drive. Using `tpunmount` is required for each file created by a `tpreq` command.

See `tpunmount` in the NetBackup commands for UNIX reference guide for more information.

drive_unmount_notify Script

When a `tpunmount` command is executed, a call is made to execute the `drive_unmount_notify` script.

This script allows user special-handling to occur at this point. Control is then returned to NetBackup to resume processing. The script is only called from the `tpreq` command for drives that are in robots and is not valid for standalone drives.

This script is located in the `/usr/openv/volmgr/bin/goodies` directory. If you wish to use this feature, this script should be activated and put into the `/usr/openv/volmgr/bin` directory.

Usage information is documented within the script.

Using an Optical Disk

An optical disk cannot be used in the same ways that a tape can. It does have many similarities to a tape and takes advantage of the automation provided by Media Manager: optical disks allow automatic volume recognition, and they can be mounted and moved by a robot.

Optical disks work well with VERITAS storage management applications. These applications use databases to handle location information (offsets, capacity, and so forth) that would otherwise have to be done by the user. A user who is willing to keep track of such information can access an optical disk using the following tape commands.

In the following example, a user performs two `tar` operations to an optical disk, then lists the second `tar` image.

1. A rewritable optical disk is requested, as follows.

   ```
   tpreq tape -m XXX01A -d odiskwm -p NetBackup
   ```

2. The first tar is performed, starting at the beginning of the disk.

   ```
   tar -cvf - /home/arh | dd of=tape ibs=10240 obs=10240
   0+473 records in
   189+0 records out
   ```

3. The second `tar` is performed, starting at the end of the previous data. The `records out` information is used for the `oseek` parameter.

   ```
   tar -cvf - /home/arh/.cshrc|dd of=tape ibs=10240 obs=10240
   oseek=189
   ```

4. The disk is unmounted, as follows.

   ```
   tpunmount tape
   ```

5. The optical disk is requested again.

   ```
   tpreq tape -m XXX01A -d odiskwm
   ```

6. The second `tar` image is listed. To access the data, the user must know where it is located for the `iseek` parameter.

   ```
   dd if=tape ibs=10240 obs=10240 iseek=189 | tar -tvf -
   rw-r--r--357/110   2386 Jul  9 14:01 1992
   /home/arh/.cshrc
   ```

7. The disk is unmounted, as follows.

   ```
   tpunmount tape
   ```

External Access to Media Manager Controlled Devices

The device daemon (`ltid`) restricts access to Media Manager controlled drives that are in an up state, by changing the permissions of the device files for those drives. The permissions are changed to 0600 when `ltid` starts and back to their original settings when `ltid` is terminated (or when a drive's state is changed to DOWN).

Do not modify the permissions of these device files when `ltid` is active. To ensure reliable operation, only users that use the `tpreq` and `tpunmount` commands explained in this chapter can have access to a drive that is up under `ltid` control.

The following example uses `tpreq`:

```
tpreq tape -m xxx -d 4mm -f /tmp/tape
/bin/tar -cvf /tmp/tape files
tpunmount /tmp/tape
```

Users that do not use `tpreq` and `tpunmount` to access drives that are in the up state may encounter both access and data reliability problems. These problems occur because the Media Manager `avrd` daemon periodically attempts to rewind and read data from media in drives that are up and are not currently assigned.

A user that is unable to use `tpreq` and `tpunmount` must do one of the following actions before attempting to access the drive:

- Down the drive prior to accessing it.

- Terminate `ltid` by executing `stopltid` and then restart `ltid` after accessing the drive.

User Error Messages

See the Device Management Status Codes section of the NetBackup troubleshooting guide for errors returned from user tape commands.

Shared Storage Option (SSO) Topics 8

Note *This chapter applies only to NetBackup Enterprise Server.*

The Shared Storage Option (SSO) is a separately licensed and priced VERITAS NetBackup software option, and is available only with NetBackup Enterprise Server. SSO runs on Windows and UNIX media servers (see "Supported Media Servers for SSO" on page 275) that has NetBackup is installed.

This software option is the Shared Drives option and the license key used to enable it is the Shared Storage Option key.

SSO requires appropriate hardware connectivity, such as, fibre channel hubs or switches, SCSI multiplexors, or SCSI-to-fibre bridges (see "Frequently Asked Questions About SSO" on page 288).

This chapter contains the following topics:

- "What is SSO?" on page 269
- "Configuring and Verifying Your SSO Hardware" on page 271
- "Installing the Shared Storage Option" on page 274
- "Configuring SSO in NetBackup" on page 277
- "Using Media Manager with SSO" on page 282
- "Troubleshooting SSO Issues" on page 284
- "SSO Reference Topics" on page 289

What is SSO?

SSO allows individual tape drives (stand-alone drives or drives in a robotic library) to be dynamically shared between multiple NetBackup servers licensed for SSO. Each media server can access any of the shared drives as needed and each server "owns" the drives it has active. The shared drives are automatically allocated and deallocated as backup and

restore operations dictate. This allows data to be backed up directly to tape drives in a SAN (Storage Area Network) configuration instead of moving data over the LAN—an important advantage of a SAN.

An Extension of Media Manager

SSO is an important extension to tape drive allocation and configuration for NetBackup Media Manager (see "SSO Components in Media Manager" on page 289). NetBackup and Storage Migrator use Media Manager for configuration, allocation, and control of tape drives and robotic libraries.

SSO is a software solution (in NetBackup and Media Manager). SSO does not load firmware in SAN devices or communicate with hub or switch APIs. SSO can communicate with hub or switch APIs if the `shared_drive_notify` script is used.

A SAN is not Required for SSO

SSO provides the management and coordination tools necessary to effectively share tape resources in a SAN. SSO was designed to work with fibre channel networks, but it can also be applied to environments that use SCSI switches or multi-initiator configurations. SAN fibre is not required to use SSO.

Sample SSO Configuration with SAN Components

The following figure shows typical SAN components in a shared drive configuration.

Example SSO Configuration

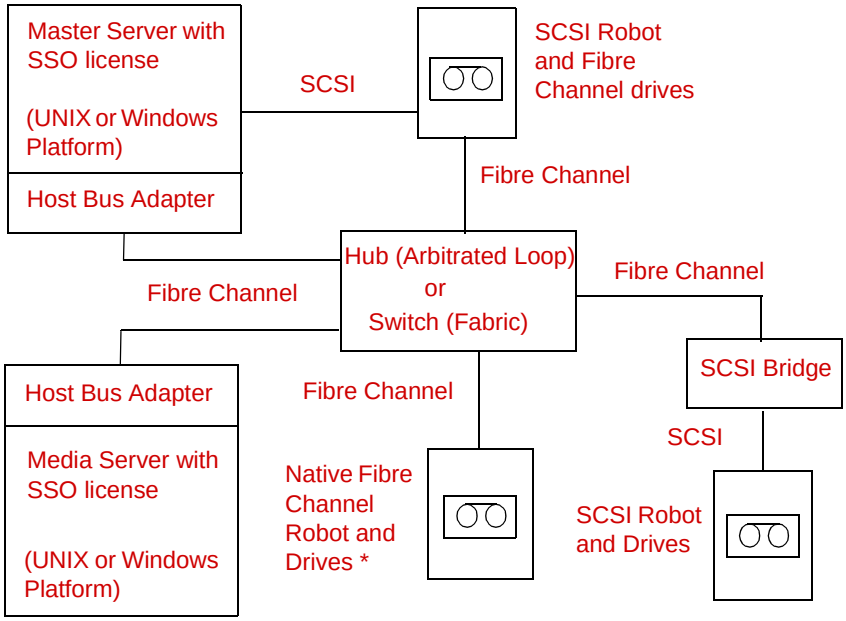

* Some robots have integrated bridges, but native fibre channel devices do not.

Configuring and Verifying Your SSO Hardware

Configuring your hardware for use with SSO includes the following general steps.

1. Configure your SAN environment.
2. Attach robots and drives.
3. Get all of the servers to recognize these shared devices.

On Windows servers, attaching devices and getting the system to recognize these devices is usually done by the operating system (in some instances you may have to install device drivers).

For UNIX servers, such as on Sun Solaris, hardware configuration may be more complicated, including modifying the sg driver configuration and other configuration files.

See "Making Changes to Your Hardware Configuration" on page 357 for information on replacing devices in an existing SSO configuration.

Using the Media Manager Device Configuration Guide

See the *NetBackup Media Manager Device Configuration Guide* for information on installing and configuring drivers, and modifying the appropriate system configuration files.

The configuration tasks explained in the device configuration guide are similar to the tasks required when configuring an SSO environment and in some cases specific fibre channel changes may be explained.

Configuration Tasks

Some of the following tasks may be optional depending on your particular hardware configuration.

- Determine the physical location of each drive within the robot. This is usually shown on the connectors to the drives or in the vendor documentation.

  This task may not be needed if you use Media Manager device discovery (a part of the device configuration wizard).

- Make all drive and robot hardware connections.
- Install SAN connecting hardware (for example, bridges, switches, or hubs).
- If fibre is part of your configuration and you are using a SCSI-to-fibre bridge, determine the SCSI-to-fibre channel mapping for your tape devices.

  Hard-wired SCSI IDs are converted to fibre channel LUNs that are presented to hosts involved in the configuration. Understanding which LUNs map to which physical SCSI IDs will ensure correct drive assignments.

  Familiarity with the hardware and various vendor configuration tools will help you accomplish this task. See the vendor documentation for your bridge.

- Record the physical configuration.

  When setting up an SSO configuration, it is helpful to record your hardware information. Record the adapter, SCSI addresses, WWNs, and fibre channel LUNs to which you connected each drive. It is also useful to record the version levels of firmware and drivers.

- Install and configure the appropriate drivers. See your vendor documentation for instructions.
- On UNIX servers, create any device files that are needed. Depending on the operating system, these files may be created automatically by using a reconfiguration boot (`boot -r`).

Create the device files for each drive based on the fibre channel LUNs of the drives and adapters. Add the name of the device file to your notes to complete the correlation between device files and physical drive location.

Use the device configuration guide and the man pages that are available with the operating system.

- On UNIX servers, customize the operating system by modifying the appropriate system configuration files. This task requires knowledge of the system files that use the SSO environment and their formats. For example on Sun Solaris systems, you may need to modify the sg, st, and HBA driver files.

  Modify the HBA driver files to bind fibre channel devices (WWN) to a specific target ID. See your vendor documentation for specific syntax and more information.

- On Windows servers refer to the HBA documentation from the vendor for instructions on configuring the HBA.

- Use any available hardware configuration interface to configure and ensure that the configuration is what you expect. For example on Windows servers, you can use the HyperTerminal interface to configure SCSI-to-fibre bridges (click **Start** > **Programs** > **Accessories** > **HyperTerminal**).

  Use the following general order when you configure and verify the hardware (start with the robot and shared drives and work back to the host):

  a. Robot and shared drives

  b. Bridges

  c. Hub or switches

  d. Hosts

- If you experience errors during the installation and configuration of your SSO devices and you suspect the operating system, refer to the operating system logs as described in your operating system documentation.

Verifying Your Hardware is Connected and Working

Test your hardware configuration before proceeding with other configuration steps—this task is very important and is often overlooked. Note the following points:

- Verify that all of your servers (master and media) are able to communicate with one another. Perform a `ping` from each server to every other server. Be sure to `ping` by host name to verify that the name resolution methods are functioning properly.

- Use the NetBackup `bpclntcmd` utility to resolve IP addresses into host names. See the NetBackup troubleshooting guide and the NetBackup commands guide for more information.
- Use operating system and Media Manager commands and tools where available to verify the devices are configured correctly. Make sure you can "see" your devices on the SAN before you install and configure the SSO option.

  For example on Solaris systems, use `mt -f /dev/rmt/0 status`). Note that if the configuration doesn't work in the operating system, it won't work for SSO.
- Make sure any dip switches on drives are set correctly (see "SSO Restrictions and Limitations" on page 276).
- See the appropriate chapter in the NetBackup Media Manager device configuration guide for more information and examples (the chapters in the configuration guide are organized by media server operating system type).

Installing the Shared Storage Option

See the following related topics:

- "System Requirements for SSO" on page 274
- "Volume Database Host (Device Allocation Host) Requirements" on page 275
- "Supported Robot Types for SSO" on page 275
- "Supported Media Servers for SSO" on page 275
- "SSO Restrictions and Limitations" on page 276
- "SSO Installation" on page 277

System Requirements for SSO

Because control messages used by the device allocator and many types of robot control are passed by a socket connection, all NetBackup and Storage Migrator servers must be LAN-connected.

See "NetBackup Mixed Server Configurations" on page 36 for information about mixed NetBackup server environments.

Volume Database Host (Device Allocation Host) Requirements

The host that is defined as the volume database host (usually the NetBackup master server) is also the device allocation host for SSO. If this system fails, not only will the SSO feature become non-operational, but all NetBackup backup and restore activity will fail. The following are requirements and recommendations for this host.

Host Requirements
It must be network-accessible from all hosts that are sharing drives managed by the device allocation host.
The volume database host, the global device database host, the vmd/DA host, and the master server must all be running the same level of NetBackup. The volume database host and the global device database host must be at the same or greater level of NetBackup as the media servers that they service.
VERITAS Host Recommendations
Use a common volume database host (the NetBackup master server is recommended) for your configuration.
Configure the common volume database host as a Highly Available host.
Use a relatively high-powered server for your volume database host.

Supported Robot Types for SSO

There is a difference between Media Manager supported robot types and Media Manager supported robot types for use with SSO.

SSO is supported *only* with the following Media Manager robot types. (The remaining Media Manager robot types are *not* supported for SSO.)

- ACS, TLH, and TLM (these are known as API robot types)
- TL8 and TLD

Supported Media Servers for SSO

The following list shows the media server platforms that are supported for use with SSO. See the NetBackup Media Manager device configuration guide and the NetBackup release notes for information on the supported operating system levels for these server platforms.

- Sun Solaris

- IBM RS6000 AIX
- HP HP9000 HP-UX
- HP Alpha Tru64 UNIX
- SGI IRIX
- RedHat Linux
- Suse Linux
- Microsoft Windows

SSO Restrictions and Limitations

- SSO cannot be used to share drives with an NDMP server. For example, a Network Appliance or an Auspex file server cannot share a tape drive with a NetBackup media server.
- SSO cannot be used to share drives with VERITAS Backup Exec. There is no interoperability between NetBackup and Backup Exec SSO, and they cannot share the same drives or robotics because of the different methods of drive arbitration that are used.
- SSO cannot be used to share drives with other applications running on a system, including system commands that access shared drives. This can interfere with device control and may lead to data loss.
- SSO cannot be used with certain types of tape robots. See "Supported Robot Types for SSO" on page 275 for the robot types that are supported.
- SSO is configured with Media Manager interfaces that are provided with NetBackup. If you intend to utilize SSO with VERITAS Storage Migrator you also must have NetBackup installed.
- Frequency-based drive cleaning is not supported for SSO drives because of issues tracking drive usage among multiple hosts. TapeAlert should be used.

  See "Frequency-Based Cleaning" on page 335 for information on replacing devices in an existing SSO configuration.

  Also see "Frequently Asked Questions About SSO" on page 288.
- NetBackup does not share media between media servers for shared (or non-shared) drives. When media is first used in a backup, NetBackup notes the media server (or NetBackup SAN media server) where the media is written and does not allow the media to be used by other servers.
- In some configurations, individual host power failure or reboots can affect data transfers on other hosts that share connectivity on a SAN.

- Older Sony AIT tape drives *may* require specific dip switch settings for proper SSO configuration and these settings can be different on various hosts. This is a limitation in their use in a SSO configuration. A Sony AIT drive that requires dip switch settings cannot be connected to multiple hosts that require different switch settings. In homogeneous configurations these drives work correctly; for example, in a configuration with multiple Windows hosts or multiple Solaris hosts.

SSO Installation

When you install NetBackup on a server you enter a key for NetBackup Enterprise Server. When NetBackup software is installed, Media Manager and the Shared Storage Option software are also installed.

SSO is a separately licensed feature and although the SSO software is already installed, you need a key to enable it. Check the license keys that were included with your software order to ensure that you have the Shared Storage Option key.

On the server you are prompted to enter license keys for any other software options that you purchased and want to enable. For more information on administering licenses for optional software, see the NetBackup system administrator's guide.

You can check keys by using the license key GUI available from the NetBackup help menu on Windows and UNIX servers (**Help** > **License Keys**). You can also use the `get_license_key` command on UNIX servers.

SSO must be enabled (by entering the Shared Storage Option key) on *every* server where shared drives will be configured and used.

▼ To enable SSO on all servers

1. Enable SSO on your master server.
2. Enable SSO on all of your media servers (or NetBackup SAN media servers).

Configuring SSO in NetBackup

Before using NetBackup, you must configure your shared drives for Media Manager usage (see "Configuring SSO Devices in Media Manager" on page 278), and also configure storage units and backup policies (see "Configuring NetBackup Storage Units and Backup Policies" on page 279).

Configuring SSO Devices in Media Manager

Using the Device Configuration or the Shared Drive Media Manager wizards is recommended and is the easiest method for configuring shared drives. Each of these wizards guides you through the steps involved in configuring drives that will be shared.

See "Why You Should Use the Media Manager Wizards" on page 44 and "Adding Shared Drives" on page 59.

There are also alternate ways to configuring SSO. See "Using Alternate Interfaces to Configure Shared Drives" on page 60.

Device Configuration Wizard Limitations

When using the Device Configuration wizard for shared drives, the limitations are different than in a configuration without shared drives. The following limitations apply when using this wizard in an SSO configuration.

Also see "The Device Configuration Wizard" on page 45 for more information about this wizard.

- You can use this wizard to configure devices only on the media servers listed in "Supported Media Servers for SSO" on page 275.
- In an SSO environment, this wizard does not support the complete configuring of ACS or TLM robots.

  Some manual configuration is also involved. See "Configuring Shared ACS Drives" on page 478 and "Configuring Shared TLM Drives" on page 513.
- This wizard also does not support LMF or RSM robots, but these two robot types are *not* supported for SSO. The wizard will configure any drives found in these robots as standalone drives.
- This wizard can discover robots and drives attached to NDMP hosts, but using shared drives with NDMP is *not* supported for SSO.

Shared Drive Wizard Limitations

The Shared Drive wizard can be used to configure shared drives in ACS, TL8, TLD, TLH, or TLM robots; to configure shared standalone drives, or to change an existing shared drive.

This wizard has limited usage and

- Does not configure robots.
- Does not use device serialization and requires prior configuration details from you about your configuration before starting.

- Configures only one drive at a time.

Configuring NetBackup Storage Units and Backup Policies

On the master server you need to configure storage units and policies for your shared drives. If the device configuration wizard was used, storage units may have already been configured by the wizard.

See the NetBackup system administrator's guide for more detailed information.

Configuring Storage Units for Each Media Server

In each storage unit definition, you logically define the robot and the shared drives for that media server. For the number of drives to be used for backup (**Maximum concurrent drives used for backup**), you should specify the total number of all shared drives in the robot.

Configuring a Backup Policy for Each Media Server

Defining a policy for a media server depends on your VERITAS media server license, as follows. A license for a regular media server provides the greatest flexibility in configuring policies. A license for a NetBackup SAN media server is more restrictive.

- If you are defining a policy for a media server that is using SSO, then the policy can contain the media server (itself) as a client and any other network clients that you want to back up across the SAN to this media server.
- If you are defining a policy for a NetBackup SAN media server, then the policy will have just one client—the SAN media server—and will use the specific storage unit.

If you are defining a policy for network clients that you want to back up anywhere in your configuration, you can list all of the clients and choose **Any_available** (on NetBackup UNIX servers) or **Any available** (on NetBackup Windows servers) as the policy storage unit or use the storage unit groups (prioritized storage units).

Verifying Your SSO Configuration

In an SSO configuration, a drive that is shared among multiple media servers must have the same logical name (drive name) on all of the NetBackup media servers. If the drive resides within a robotic library, it must also be correctly located (using the driver number) within the library. This section describes some tools that can be used to verify your configuration.

Verifying that your SSO configuration is set up correctly depends on your devices and how you configured SSO as follows:

- If you have serialized devices in your SSO configuration, VERITAS recommends using the Device Configuration wizard. The wizard will verify your configuration.
- If you have non-serialized devices in your SSO configuration, see the VERITAS support site for a tech note with instructions on verifying your configuration. The headline for the tech note is “Verifying an SSO Configuration with Non-Serialized Devices“.
- If you have serialized devices in your SSO configuration but you did *not* use the Device Configuration wizard, use the following procedure to verify your configuration.

▼ To verify a manually-configured SSO configuration

On all servers in your SSO configuration that are sharing a drive, you execute `scan` and `tpconfig -d` to verify that the robot drive number shown in the output of `tpconfig` matches the drive number that the robot reports in the output of `scan`. These commands are located in the NetBackup Media Manager directory `\Volmgr\bin`.

In the following example the ADIC robotic library has six drives, but only drives 5 and 6 are configured on this particular host.

Note The scan utility is not officially supported by VERITAS.

1. Execute `tpconfig -d` or `tpconfig -dl` and `scan`.
2. The output from `tpconfig -d` shows the logical drive names as assigned by Media Manager (`QUANTUMDLT70000` and `QUANTUMDLT70001`) and the drive numbers for each drive.

```
Index DriveName           DrivePath          Type   Shared  Status
***** *********           **********         ****   ******  ******
  0   QUANTUMDLT70000     /dev/st/nh3c0t5l0  dlt     No      UP
        TLD(0) Definition  DRIVE=5
  1   QUANTUMDLT70001     /dev/st/nh3c0t1l0  dlt     No      UP
        TLD(0) Definition  DRIVE=6

Currently defined robotics are:
  TLD(0)     robotic path = /dev/sg/h3c0t0l0,
             volume database host = norway
```

3. The output from the robot section of `scan` shows the same address for the robot (`/dev/sg/h3c0t0l0`), drive numbers (5 and 6), and serial numbers (`PXA37S3261` and `PXA50S2276`) of these drives in the robot:

```
************************************************************
********************** SDT_TAPE    ************************
********************** SDT_CHANGER ************************
********************** SDT_OPTICAL ************************
************************************************************
Device Name  : "/dev/sg/h3c0t0l0"
Passthru Name: "/dev/sg/h3c0t0l0"
Volume Header: ""
Port: -1; Bus: -1; Target: -1; LUN: -1
Inquiry    : "ADIC    Scalar 100      3.10"
Vendor ID  : "ADIC    "
Product ID : "Scalar 100      "
Product Rev: "3.10"
Serial Number: "ADIC009K0340314"
WWN          : ""
WWN Id Type  : 0
Device Identifier: ""
Device Type    : SDT_CHANGER
NetBackup Robot Type: 6
Removable      : Yes
Device Supports: SCSI-2
Number of Drives : 6
Number of Slots  : 50
Number of Media Access Ports: 10
Drive 1 Serial Number      : "PXB03S0979"
Drive 2 Serial Number      : "PXB03S0913"
Drive 3 Serial Number      : "CXA04S2051"
Drive 4 Serial Number      : "PXA31S1787"
Drive 5 Serial Number      : "PXA37S3261"
Drive 6 Serial Number      : "PXA50S2276"
Flags : 0x0
Reason: 0x0
```

4. Using the drive paths (`/dev/st/nh3c0t5l0` and `/dev/st/nh3c0t1l0`) from the output of `tpconfig`, match the drive paths in the drives section output of `scan` to locate the serial numbers for each drive (`PXA37S3261`) and (`PXA50S2276`).

```
------------------------------------------------------------
Device Name  : "/dev/st/nh3c0t5l0"
Passthru Name: "/dev/sg/h3c0t5l0"
Volume Header: ""
Port: -1; Bus: -1; Target: -1; LUN: -1
Inquiry    : "QUANTUM DLT7000         2561"
Vendor ID  : "QUANTUM "
Product ID : "DLT7000         "
Product Rev: "2561"
Serial Number: "PXA37S3261"
```

```
WWN          : ""
WWN Id Type  : 0
Device Identifier: ""
Device Type    : SDT_TAPE
NetBackup Drive Type: 9
Removable      : Yes
Device Supports: SCSI-2
Flags : 0x4
Reason: 0x0
------------------------------------------------------------
Device Name  : "/dev/st/nh3c0t1l0"
Passthru Name: "/dev/sg/h3c0t1l0"
Volume Header: ""
Port: -1; Bus: -1; Target: -1; LUN: -1
Inquiry    : "QUANTUM DLT7000         296B"
Vendor ID  : "QUANTUM "
Product ID : "DLT7000         "
Product Rev: "296B"
Serial Number: "PXA50S2276"
WWN          : ""
WWN Id Type  : 0
Device Identifier: ""
Device Type    : SDT_TAPE
NetBackup Drive Type: 9
Removable      : Yes
Device Supports: SCSI-2
Flags : 0x4
Reason: 0x0
```

5. Verify that the serial numbers for each drive (`PXA37S3261`) and (`PXA50S2276`) match the serial numbers in the output from the robot section of `scan` (see step 3).

6. Repeat these steps on all of the servers in your configuration. Ensure that each shared drive has the same logical Media Manager drive name on each media server that is sharing the drive.

Using Media Manager with SSO

You can use the Device Monitor to obtain information about your SSO configuration and manage your shared drives. See “Using the Device Monitor with SSO” on page 283.

You can also fine tune your configuration by adding SSO-related options in the Media Manager configuration file. See “Adding SSO Configuration Options” on page 284.

Using the Device Monitor with SSO

The Drive Status Pane

This display contains columns that are of note for shared drives. For example, **Control** and **Drive Index**.

See "Drives Status Pane" on page 228 for more details.

Changing the Operating Mode for a Shared Drive

The change mode dialog contains a list of the hosts that are sharing the selected drive. You can choose any number of hosts where the mode change will apply.

See "Changing the Operating Mode of a Drive" on page 238 for more details.

Adding or Changing a Comment for a Shared Drive

The change drive comment dialog contains a list of the hosts that are sharing the selected drive. You can choose any number of hosts where the change will apply.

See "Adding or Changing a Drive Comment" on page 243 for more details.

Performing Drive Cleaning Functions for a Shared Drive

See the following table for the available drive cleaning functions and their use with shared drives.

Drive Cleaning Function	Shared Drive Usage
Clean Now	In the list of hosts sharing the drive, you can choose only one host where the function will apply.
Reset Mount Time	In the list of hosts sharing the drive, you can choose any number of hosts where the function will apply.
Set Cleaning Frequency	This function is not available for shared drives.

See "Drive Cleaning Functions" on page 241 for more details.

The Device Configuration Analyzer

This wizard verifies that the settings in your device configuration are consistent and checks for potential configuration problems.

You can obtain information about this wizard before you start using the it, including what to expect in the wizard and what the wizard checks by using the help in the wizard.

See "Using The Device Configuration Analyzer" on page 249 for more information.

Shared Storage Option Summary Reports

These reports contain Media Manager information about your SSO configuration, including the drives and hosts.

See "Shared Storage Option Summary Reports" on page 250.

Adding SSO Configuration Options

You can fine tune your configuration by adding SSO options to the Media Manager configuration file.

See "The Media Manager Configuration File (vm.conf)" on page 379 for descriptions of all of the available `vm.conf` entries.

Troubleshooting SSO Issues

This section includes the following:

- Lists of guidelines ("Hardware Configuration Guidelines" on page 284 and "Media Manager Configuration Guidelines" on page 285).
- Operating system references ("Operating System Help" on page 286).
- Common problems ("Common Configuration Issues with SSO" on page 286)
- FAQs that may help you resolve any SSO issues ("Frequently Asked Questions About SSO" on page 288).

Hardware Configuration Guidelines

- Mixing SAN components can introduce problems. Always use a SAN configuration and firmware levels that are supported by the hardware vendors.

- Consult SAN device, HBA, and operating system documentation to determine how to configure operating system tape drivers and passthru drivers to detect your SAN devices.
- Check your hub timer settings.
- Using hard arbitrated loop physical addresses, rather than soft addresses, usually works best. It is important to check with hardware suppliers to verify the recommended usage of their products.
- Check the firmware levels of all your fibre-channel hardware (for example, bridges) and make sure you are using the most recent level that is known to inter-operate with other SAN hardware devices. Firmware levels change very rapidly.
- Try to duplicate SAN issues and problems using commands and utilities on the host operating system.
- Test both backup and restore capabilities. It is possible to complete backups, but have unrecoverable images (for example, caused by incorrect switch settings).
- Ensure your hardware and SAN configuration is working and stable before adding SSO software.

  Test backup and restore capabilities with dedicated tape drives before configuring them as shared drives.
- When building a large configuration, start drive sharing with a small number of tape drives and a small number (two or three) of media servers (or NetBackup SAN media servers).
- Configuration and troubleshooting of SSO is much easier when done on a smaller scale. If possible, create multiple and independent SSO configurations with subsets of servers sharing subsets of SAN-attached drives.
- Use the correct boot order for your fibre-channel hardware, as follows. Some devices take a while to completely boot. Watch for any indicator lights to become green.

  a. Robots or drives

  b. Bridges

  c. Hubs or switches (wait 3 or 4 minutes)

  d. Hosts

Media Manager Configuration Guidelines

Because of the great potential for creating incorrectly identified devices within an SSO configuration, it is recommended that you follow these practices:

- Use the Media Manager wizards to configure SSO. In particular, use the Device Configuration wizard rather than the Shared Drive wizard where possible.
- If you are using the Device Configuration wizard, you should configure all shared drives from *one* host (this is usually the master server). Launch the wizard only once with the current host set to the master server. You then indicate a list of media servers or NetBackup SAN media servers (in the Device Hosts screen). The wizard will configure devices on all of the media servers you selected and these hosts will receive the shared configuration information.
- Whether you have single or multiple master servers, define only one server to contain the volume database.

  If you are using the Device Configuration wizard on a new installation, the volume database host is set by default to be the master server (unless you did not accept the default settings during NetBackup installation).
- After configuring a subset of shared devices, use the configuration analyzer to check and point out any errors before continuing with other devices.

  See "The Device Configuration Analyzer" on page 284.

Operating System Help

If errors occur during the installation or configuration of your SSO devices and you suspect problems with the operating system, refer to the following:

- Operating system logs, as described in the operating system documents.
- NetBackup logs.
- Operating system man pages (UNIX servers only).
- The NetBackup Media Manager device configuration guide.

Common Configuration Issues with SSO

- Using incompatible or outdated firmware or drivers in a hub, switch, HBA, or bridge.
- Did not set the JNI HBA fail-over value to a value of zero to avoid I/O hangs (this is a bridge/HBA vendor fix).
- Using a HBA with SCSI-3 protocol, and the HBA is not compatible with the operating system drivers.
- Using cluster configurations when they were not supported.
- Using vendor peripherals that only work on a fibre-channel arbitrated loop.

- Did not verify that SSO has been enabled on *each* server (you enable SSO using the Shared Drive license key).
- Did not verify that SSO has been installed correctly. You can check keys by using the license key GUI available from the NetBackup **Help** menu on Windows and UNIX servers.
- Did not configure all of SSO from the master server. All configuration should be done from the master server, not from a media server (or SAN media server).
- Did not configure the same robotic path on every host. Remember that except for ACS and TLM robot types, only one host controls the robot.
- When using the Device Configuration wizard, did not select the appropriate device hosts, including the host with robotic control.
- Created inconsistent configurations by using `tpconfig` to configure SSO rather using than the configuration wizards. These wizards have the added benefit of coordinating configurations across all hosts that are sharing the drives.
- Drives and robots that are connected by fibre channel cause increased complexity in a Media Manager device configuration. On some operating systems, the use of SCSI-to-fibre bridges may result in inconsistencies in the device paths when rebooting the host. After a reboot of the host, the device configuration should be verified.
- Using a name that is not consistent across all systems sharing drives.
- Did not test the drive paths on every media server.
- Did not define NetBackup storage units for each media server.
- Interrupting the data path while backup data is being transferred will cause the NetBackup job to fail. It can fail with a media write error or it may hang and have to be terminated manually.
- Did not use Berkeley-style close on the tape path (UNIX servers only)
- See the Sun chapter of the NetBackup Media Manager device configuration guide for more information on the following configuration tasks.

  Forgot to add tape configuration list entries in `/kernel/drv/st.conf` (if needed).

  Did not define configuration entries for expanded targets and LUNs in `sg.links` and `sg.conf` files. If you see problems with the entries in the `/etc/devlink.tab` file (created from `sg.links`). Check the following:

  - The first entry uses hexadecimal notation for the target and LUN. The second entry uses decimal notation for the target and LUN.
  - Use a single tab character between the entries, not a space or a space and a tab.

  Did not configure the operating system to force load the `sg/st/fcaw` drivers.

Frequently Asked Questions About SSO

What combinations of SAN hardware components are supported for SSO?

SSO works with many hardware combinations. VERITAS has an open policy on hardware support for SSO. It is important to check with hardware suppliers to verify the interoperability of their products.

A list of SAN components that have been tested with NetBackup is available on the support web site (`http://support.veritas.com`).

I assume that once a server picks a tape drive and writes media, that media can only be written to again by that server. With existing NetBackup media servers today, a tape "belongs" to a media server until it expires or is deleted. Is this right?

Yes. Assigned media is still dedicated to a single server (see "SSO Restrictions and Limitations" on page 276). Be sure to define only one volume database host.

If I allocate four drives to a server and after an hour the server is finished with two of the drives and another server is requesting drives, will the two available drives be reallocated? Or does NetBackup wait until the backup schedule using the four drives is completely finished before reallocating the drives?

The two available drives will be reallocated and used. The NetBackup tape manager component is aware of drive status and notifies the NetBackup scheduler of drive availability.

Does the NetBackup SSO use IP protocol or SCSI protocol?

SSO uses IP protocol to pass control messages among peers.

Is it possible to set up drive cleaning for shared drives? I realize you can't use frequency-based cleaning, but can TapeAlert be used?

Yes. Using TapeAlert without frequency-based cleaning means that the tape will be cleaned only when the drive firmware (TapeAlert) requests a cleaning.

TapeAlert is not available for some types of drives, and some host platforms and adaptor connections. Since TapeAlert provides the same type of cleaning as library-based cleaning (robotic cleaning or auto cleaning), it is recommended that you disable library-based cleaning if using TapeAlert (for most vendor's robots).

SSO Reference Topics

SSO-Related Terms and Concepts

Shared Drive

When the Shared Storage Option is installed, a tape drive that is shared among hosts is termed a shared drive.

Backup Exec Shared Storage Option

The VERITAS NetBackup Shared Storage Option is not the same as the VERITAS Backup Exec Shared Storage Option. The Backup Exec implementation of drive sharing does not include support for UNIX servers and uses a different method for drive arbitration.

Library Sharing or Robot Sharing

Media Manager also manages distributed access from multiple servers to robotic tape libraries (library sharing or robot sharing). This capability is not related to SSO and should not be confused with SSO.

Media Servers and NetBackup SAN Media Servers

VERITAS licenses media servers that can back up their own data or data from other network clients as well. VERITAS also licenses NetBackup SAN media servers that can only back up their own data to shared drives—no backing up of data residing on other clients is allowed.

SSO Components in Media Manager

SSO utilizes the basic NetBackup and Media Manager processes and daemons to perform its tasks. `vmd` is the Media Manager volume daemon on UNIX hosts and the NetBackup Volume Manager service on Windows hosts. A major function of `vmd` is to manage media information. An additional function that `vmd` can provide is to be the device allocator (`DA`) for shared drives. In this case, `vmd` is known as `vmd/DA`.

vmd/DA

To coordinate network-wide allocation of tape drives, `vmd/DA` acts as a central clearing agent for all NetBackup and Storage Migrator shared tape requests in a storage area network. `vmd/DA` responds to requests from multiple instances of NetBackup master servers, media servers, NetBackup SAN media servers, or Storage Migrator (the versions of Media Manager that are installed must be compatible).

For shared drive configurations, the host that is configured as the volume database host for a drive in a robot or a standalone drive is also known as the device allocation host (see "Device Allocation Host" on page 293). This is the host where `vmd/DA` resides. Other hosts in the configuration have `vmd` without device allocator functionality being utilized.

`vmd/DA` maintains shared drive and host information, such as a list of hosts that are registered to share a drive and which host currently has the drive reserved. Shared drive information is

- Modified by requests from `ltid` (the Media Manager device daemon on UNIX and the NetBackup Device Manager service on Windows).
- Dynamic, since it is built and maintained at runtime, rather than being stored on the device allocation host.

When `ltid` initializes on a device host, it calls `vmd/DA` with a list of shared drives. `vmd/DA` adds these drives and the host name to its configuration if necessary. Since `ltid` passes a complete list of drives each time, `vmd/DA` deletes references to drives for that host when a change in configuration removes them from that host's shared drive list. This deletion occurs when `ltid` is shut down gracefully or after it is restarted.

Example SSO Configuration Showing Media Manager Components

The following figure shows an example of a shared drive configuration with Media Manager components. See the NetBackup troubleshooting guide for a process flow diagram of SSO components.

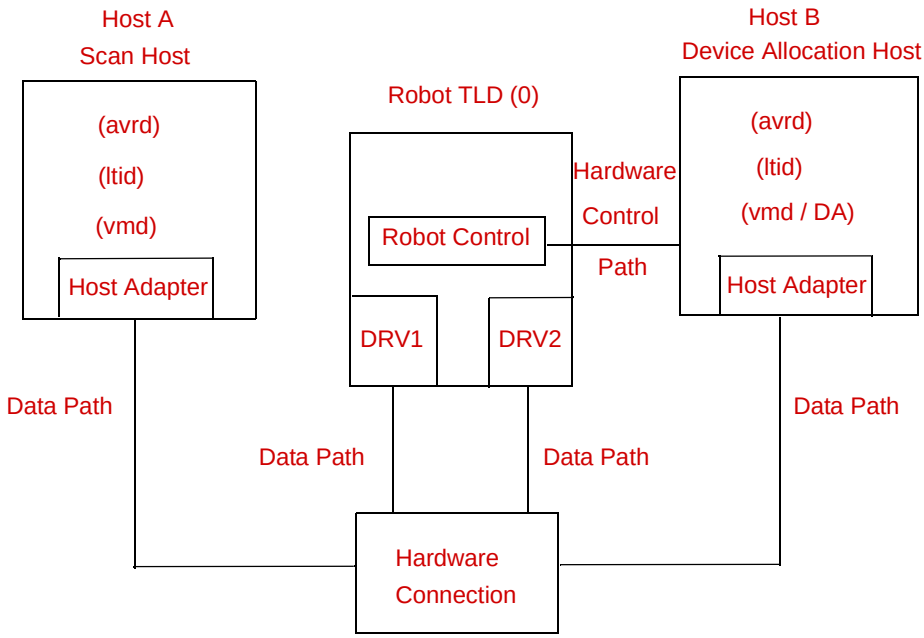

In this figure, Host A is

- Connected to drives DRV1 and DRV2 through enabling hardware.
- The host where `ltid` was started first and called `vmd/DA` on the device allocation host (Host B) to register a shared drive. This action identifies Host A as the initial scan host (see "Scan Host" on page 292) for the drives.

In this figure, Host B

- Is connected to drives DRV1 and DRV2 through enabling hardware.
- Is configured to be the volume database host for the robot TLD (0) and therefore is also the device allocation host (see "Device Allocation Host" on page 293). `vmd/DA` is active on this host.
- Controls the robotics (except for ACS or TLM robot types, there is only one robot control host for each robot).
- Could be optionally configured as a Highly Available (HA) server.

Scan Host

Each shared drive has a host that is identified as the scan host. A *scan host* is the host where `avrd` (the automatic volume recognition daemon/process) is scanning the drive when there is no other activity on that drive. A scan host must have data-path access to the drive.

Instances of `ltid` on hosts that are *not* scan hosts create `rdevmi` (remote device management interface) processes on the scan hosts. These processes communicate with the other hosts sharing the drive, and run on the scan hosts as slave processes of the non-scan hosts `ltid`. These processes receive drive status information held in shared memory on the scan host. This status information is used to maintain the shared drive information on all of the hosts sharing the drive.

Each time an `rdevmi` process starts up, it is logged in the daemon log. Also, each host that is identified as a scan host in the output of the `vmdareq` command will show `rdevmi` processes running for each host it is sharing a drive with. For example if there are 12 hosts sharing a drive, the host that is the scan host will have 11 `rdevmi` processes running on it.

How the Scan Host is Determined

Scan hosts are determined by `vmd/DA` and may be different for each shared drive. The first device host (with a scan ability factor of non-zero, see "Adding SSO Configuration Options" on page 284) that registers each shared drive with `vmd/DA` becomes the initial scan host for that drive. This host does not change as other hosts register.

All device hosts that register with `vmd/DA` pass a list of shared drives. The name of the currently assigned scan host for each drive is then returned to each registering host.

The Scan Host Can Change

A scan host is assigned for a shared drive until some interruption occurs. For example, one of the following occurs:

- The socket connection, the host, the drive, or the network goes down.
- The drive is logically placed in the Down mode.

A new scan host is then chosen. If a scan host is declared unavailable, `vmd/DA` assigns a new scan host so that the requesting host can resume as soon as the previous scan host relinquishes its use of the drive.

The scan host temporarily changes to hosts that are requesting tape mounts while the mount is in progress. This happens so only one host at a time has access to the drive path.

A scan host for a drive needs to periodically re-register with `vmd/DA` to ensure that it remains the scan host. A host that is not identified as a scan host does not need to re-register until some disruptive event occurs (for example, a restart of `ltid` or a failure to get drive status data from the scan host for one or more drives).

Re-registering with `vmd/DA` keeps `vmd/DA` and the host that is registering in coordination within a dynamic shared drive configuration.

Device Allocation Host

The device allocation host is another name for the volume database host, when the volume database host performs tasks in support of SSO. This host is also the host where `vmd/DA` runs and manages the following:

- Reservations for shared drives on a host-by-host basis.
- A list of shared drives.
- A list of hosts that have registered to share a drive and where the drive is currently assigned.

How the Device Allocation Host is Determined

For SSO, the current volume database host for the drive is always the device allocation host for that drive.

If you follow the recommendations (see "Volume Database Host (Device Allocation Host) Requirements" on page 275) and configure one volume database host for a site, one device allocation host can manage multiple robotics connected to many media or master servers.

Media Manager Reference Topics A

You may find the following Media Manager reference and conceptual topics useful:

- "NetBackup Media Manager Best Practices" on page 296
- "NetBackup and Media Manager Databases" on page 300
- "Robot Overview" on page 302
- "Frequently Asked Questions About Device Discovery" on page 318
- "How NetBackup Uses SCSI Reserve/Release" on page 321
- "Correlating Device Files to Physical Drives When Adding Drives" on page 329
- "Drive Cleaning" on page 332
- "Volume Pools and Volume Groups" on page 337
- "Barcodes" on page 343
- "Using the Physical Inventory Utility for Non-Barcoded Media" on page 348
- "Making Changes to Your Hardware Configuration" on page 357
- "Labeling Media" on page 360
- "Mounting and Unmounting of Media" on page 361
- "Suspending Media Or Downing Devices" on page 361
- "How Media Manager Selects a Drive for a Robotic Mount Request" on page 361
- "How NetBackup Selects Media in Robots" on page 362
- "How NetBackup Selects Media in Standalone Drives" on page 364
- "Media Formats" on page 366
- "Media Manager Security" on page 369
- "Administrators Quick Reference" on page 374
- "The Media Manager Configuration File (vm.conf)" on page 379

NetBackup Media Manager Best Practices

The following are lists of best practices for NetBackup Media Manager. If you follow these recommendations, you will greatly reduce your chances of encountering problems. Many of these best practices are directly related to reducing the amount of effort needed to administer your configuration. Following these best practices should save you administration time.

- "General Practices" on page 296
- "Media and Device Management Domain Management" on page 297
- "Media Management" on page 298
- "Device Management" on page 298
- "Performance and Troubleshooting" on page 300
- "Other Best Practices" on page 300

Visit the VERITAS support web site (`http://www.support.veritas.com`) for a list of supported devices, server platforms, and the latest device mapping file.

See "Media Manager Terminology" on page 1 for definitions of the terms used in these topics.

General Practices

- Use only VERITAS documented and VERITAS supported options for NetBackup Media Manager commands.
- Refer to the NetBackup release notes to see if the methods you are currently using are being eliminated or going to be eliminated in future releases, as well as for information about all new functionality in each release.
- Use the documented methods for terminating the NetBackup Media Manager daemons and services.
- Periodic auditing of backups should be done using the verify command in the NetBackup administrator interface. Periodic restores should also be done.
- Always backup your media servers' databases, as well as your master server's databases.
- When restoring NetBackup databases, the backups must all be from the same point in time (this includes media databases).
- If you want to use devices with some other application and these devices are currently being controlled by Media Manager, you must do one of the following to avoid potential loss of data:

- Use the Media Manager commands, `tpreq` to mount media on a drive and `tpunmount` to remove media from the drive. Using these commands will allow you to get control of the device when Media Manager is finished with the device.
- Down the drive, if the drive is in the Media Manager UP state.

Media and Device Management Domain Management

- Users cannot share devices or volumes between MDM Domains.
- Media IDs must be unique within a given MDM Domain.
- Barcodes must be unique within a given MDM Domain.
- Drive Names must be unique within a given MDM Domain and should be descriptive.
- Robot Numbers must be unique within a given MDM Domain.
- Host names should be consistent throughout a MDM Domain. That is, everywhere within a configuration, a host should be referred to with the same name. Do not mix fully qualified and unqualified, or physical names with virtual host names.
- The MDM Domain server should be one of the NetBackup master servers and there should be only one MDM Domain server per site.
- All names and numbers for devices, and all media IDs and barcodes should remain unique across the entire enterprise.

  The following applies only to NetBackup Enterprise Server.

- The volume database host, the global device database host, and the master server must all be running the same release level of NetBackup.
- There should be only one volume database host per global device database host and both of these key databases should be located on the same host (it is recommended that this host be the master server). This host is known as the Media and Device Management Domain (MDM Domain) server.

  You can enforce this practice by adding a NOT_DATABASE_HOST entry in the Media Manager configuration file. See "Not Allowing a Host To Manage Databases" on page 393.

  The `tpautoconf` command has options to preview and merge existing global device databases. Also, the `vmdb_merge` command can be used to merge volume, pool, and media databases. See the NetBackup commands guide for details.

Media Management

- Use the robot inventory update operation for media management.
- Use a scratch pool for unassigned media.
- Configure cleaning cartridges for your drives and use TapeAlert for automatic drive cleaning where possible.
- Replace old media, especially cleaning media, according to the life-span recommendations of the manufacturer.
- Do not use robotic libraries that do not have a barcode reader and use only barcode labels that are recommended by the robot vendor.
- Use barcode rules for proper media type assignment when inventorying multi-media libraries. Use barcode-naming conventions, such as naming prefixes, to differentiate between data and cleaning tapes as well as different physical media types.
- Only use only the NetBackup Administration Console or the `bpexpdate` command to unassign media. Never use the Media Manager command lines for this task.
- Before performing inject or eject commands, the media access port should be empty. Although NetBackup can handle a port that is not empty, some libraries may have problems.

Device Management

- Periodically monitor the NetBackup system log for device errors encountered.
- Periodically monitor devices using the NetBackup Device Monitor.
- Investigate the causes of all drives that are down.
- Do not use the robotic test utilities while running backup or restore jobs.
- Read the NetBackup device configuration guide before configuring devices on media servers (or SAN media servers).
- Use only tested robots. See the NetBackup hardware compatibility list.
- Use only tested tape drives and tape drivers. See the NetBackup hardware compatibility list on the VERITAS support site.
- Use only supported server platforms and hardware. See the NetBackup release notes and the VERITAS support site.
- Use only fully-serialized devices. A full-serialized SCSI library should report a serial number for the robot and also serial numbers for each drive in the robot.
- Always configure and use pass-through paths for robotic libraries and drives.

- When applicable, enable SCSI reserve / release in the operating system.
- Use persistent bindings for fibre-attached devices.
- When applicable, use the device configuration wizard to configure your devices for use with NetBackup.

Note Any devices that were manually configured are deleted and are reconfigured by this wizard.

- Download the latest device mapping file from the VERITAS support web site before running the device configuration wizard.
- Use consistent logical drive types for all physical drive types on all servers enterprise-wide. For example, all DLT7000 drives are configured in NetBackup as the logical drive type dlt.
- Do not use the Microsoft RSM Remote Storage Manager (RSM) unless your devices need to be shared with other applications. Sharing devices between NetBackup and other applications should be avoided.
- Do not load vendor medium-changer drivers on Microsoft Windows hosts. The default Microsoft medium-changer driver is acceptable (but is not required) for use with NetBackup.
- *The following applies only to NetBackup Enterprise Server.*

  Shared devices (drives and robot libraries) must be configured on hosts that have access to each other.

  See "Shared Storage Option (SSO) Topics" on page 269 for details.
- *The following applies only to NetBackup Enterprise Server.*

  When setting up ACS robot configurations, use the following general sequence:

  a. Use the device configuration wizard to add all drives as standalone drives on one host.

  b. Manually add the ACS robot and update the drives with the correct robot coordinates.

  c. Verify the drives using the procedures outlined in the NetBackup device configuration guide.

  d. Propagate the configuration to other hosts using the device configuration wizard.

Performance and Troubleshooting

- Use the performance-tuning documents available on the VERITAS support web page.
- Use only dedicated backup servers (not application or file servers) for the volume database host and master servers. Plan periodic maintenance periods for all of your backup servers.
- Consult the NetBackup troubleshooting guide for all error conditions.
- Always install the latest NetBackup patches (feature and maintenance packs) available from VERITAS.
- Verify all SCSI-related operating system configuration files (for example, the Solaris `st.conf` file), when installing operating system patches.
- For device related problems, consult the vendor for firmware upgrades and consult the VERITAS hardware compatibility list for supported firmware levels.
- Do not use DISABLE_RESOURCES_BUSY.
- Do not disable TCP_NODELAY functionality.
- *The following applies only to NetBackup Enterprise Server.*

  See "Shared Storage Option (SSO) Topics" on page 269 before installing and configuring SSO drives.

Other Best Practices

- Have a well-documented disaster recovery and storage management plan in place. This plan should include keeping catalog backup media IDs in multiple physical locations. See the NetBackup Vault administration guide.
- Maintain an independent and separate test environment for software and hardware upgrade testing and new device compatibility testing. This environment should be used to test any changes planned for your production system.
- See the recommended best practices for your NetBackup optional software in the guides for these products. For example, see the NetBackup Vault system administration guide for the best practices for NetBackup Vault.

NetBackup and Media Manager Databases

NetBackup and Media Manager use internal databases to keep information about the media and device configuration.

Caution Do not remove or edit the NetBackup or Media Manager databases. These files are for internal use only and altering them in any way can result in permanent loss of data.

See the following topics:

- "Media Manager Volume Database" on page 301
- "Media Catalog" on page 301
- "NetBackup Catalogs" on page 301
- "Device Databases" on page 302

Media Manager Volume Database

The volume database contains information about volumes that have been configured for use by Media Manager. When you add volumes they are recorded in the volume database. The volume database resides in the `/usr/openv/volmgr/database` directory.

When adding new volumes, you target the NetBackup server that has the volume database. A part of this process is assigning media IDs.

Media IDs must be unique and can consist of six or less alphanumeric characters. Optical disks each have two media IDs, one for side A and one for side B.

Media Catalog

NetBackup keeps a media catalog with information that correlates backups to the volumes where they are stored. Each NetBackup server maintains a media catalog for the storage units that are attached to that server.

During installation, the media catalog is created in the `/usr/openv/netbackup/db/media` directory. NetBackup refers to the media catalog when it needs a volume for a backup or restore. If the media catalog does not contain a suitable volume, NetBackup has Media Manager assign one. In this manner, the catalog is populated as NetBackup uses new volumes for backups.

When the retention period has ended for all backups on a volume, NetBackup deletes the volume from the media catalog. NetBackup then sends a request to Media Manager to unassign the volume so it is available for later reassignment.

NetBackup Catalogs

Volumes for backups of the NetBackup catalogs are a special case and do not appear in the media catalog.

You must track the media IDs for these volumes separately so you can find them in case the media catalog is damaged. However, they do appear in the Media Manager volume catalog and are listed as assigned to NetBackup (they are unassigned only if you delete them from your catalog backup settings).

Alternatively, you can locate media for catalog backups using the physical inventory utility. It may take significant time for each tape to be mounted so its recorded label can be read. See "Using the Physical Inventory Utility for Non-Barcoded Media" on page 348.

Device Databases

The device databases have information about the drives and robots that are in NetBackup storage units. When you configure drives and robots, Media Manager stores this information in its device databases. These databases are located under `/usr/openv/volmgr/database`.

Robot Overview

In Media Manager, a robot is a peripheral device that automates the mounting and dismounting of media in tape or optical disk drives. Media Manager software that controls robots is referred to as robotic control software.

See the following topics:

- "Media Manager Robot Types" on page 302
- "Media Manager Media Types" on page 304
- "Robot Attributes" on page 305

Media Manager Robot Types

Media Manager classifies robots by robot type, according to one of the following characteristics:

- The physical characteristics of the robot. Library usually refers to a larger robot, in terms of slot capacity or number of drives. Stacker usually refers to a robot with one drive and low media capacity (6 - 12 media slots).
- The media type commonly used by that class of robots. 4 MM and 8 MM are examples of media types.
- The communication methods used by the underlying robotics. SCSI-based and API robots are the two main methods.

The following table lists the Media Manager robot types, with drive and slot limits for each type. Check the Note column for any restrictions.

Visit the VERITAS support web site to determine which robot type applies to the model of robot that you are using.

Media Manager Robot Types

Robot Type	Description	Drive Limits	Slot Limits	Note
ACS	Automated Cartridge System	1680 (per the ACS Library Software host)	No limit	Applies only to NetBackup Enterprise Server.
LMF	Library Management Facility	256	No limit	Applies only to NetBackup Enterprise Server.
ODL	Optical Disk Library	12	490	
RSM	Removable Storage Manager	256	No limit	
TL4	Tape Library 4MM	2	15	
TL8	Tape Library 8MM	No limit	16000	
TLD	Tape Library DLT	No limit	16000	
TLH	Tape Library Half-inch	256	No limit	Applies only to NetBackup Enterprise Server.
TLM	Tape Library Multimedia	250	No limit	Applies only to NetBackup Enterprise Server.
TS8	Tape Stacker 8MM	2	21	
TSD	Tape Stacker DLT	1	14	
TSH	Tape Stacker Half-inch	1	10	

Media Manager Media Types

Media Manager uses media types to differentiate tape or optical media with different physical characteristics. Each Media Manager media type may represent a specific physical media type, for example Sony AIT media can have a Media Manager media type of 8MM, 8MM2, or 8MM3.

The following table lists the Media Manager media types and their description:

Media Type	Description
QCART	1/4 inch cartridge tape
HCART	1/2 inch cartridge tape
HCART2	1/2 inch cartridge tape 2
HCART3	1/2 inch cartridge tape 3
4MM	4MM cartridge tape
8MM	8MM cartridge tape
8MM2	8MM cartridge tape 2
8MM3	8MM cartridge tape 3
DLT	DLT cartridge tape
DLT2	DLT cartridge tape 2
DLT3	DLT cartridge tape 3
DTF	DTF cartridge tape
REWR_OPT	Rewritable optical disk
WORM_OPT	WORM optical disk
HC_CLN	1/2 inch cleaning tape
HC2_CLN	1/2 inch cleaning tape 2
HC3_CLN	1/2 inch cleaning tape 3

Media Type	Description
4MM_CLN	4MM cleaning tape
8MM_CLN	8MM cleaning tape
8MM2_CLN	8MM cleaning tape 2
8MM3_CLN	8MM cleaning tape 3
DLT_CLN	DLT cleaning tape
DLT2_CLN	DLT cleaning tape 2
DLT3_CLN	DLT cleaning tape 3
DTF_CLN	DTF cleaning tape

Alternate Media Types

Use the 8MM2, 8MM3, DLT2, DLT3, HCART2, or HCART3 alternate media types when you have more than one type of 8MM, DLT or 1/2 inch cartridge tape in the same robotic library and you want to differentiate between them.

For example if a robotic library has DLT7000 and DLT4000 drives, you do not want to accidently load a tape that was written in a DLT7000 drive into a DLT4000 drive. In this case, you can specify the DLT media type for DLT7000 tapes and DLT2 for DLT4000 tapes, if the drive types were configured using the same convention.

Note In a robotic library, all of the volumes of a particular vendor media type *must* be the same Media Manager media type.

In the example that follows for a TLH robot type, the HCART2 media type is not valid. Both volumes must be HCART or both must be HCART2.

```
Volume     TLH Media Type      Media Manager Media Type
ABC123       3490E                   HCART
ABC156       3490E                   HCART2
```

Robot Attributes

Media Manager configures and controls a robotic device differently depending on the robot type. The following tables list the attributes that dictate how these robot types differ.

See the NetBackup release notes or visit the VERITAS support web site for more detailed information on supported peripherals, platforms, and firmware levels tested.

ACS Robot Attributes

Attribute	NetBackup Server (ACS robots are not supported)	NetBackup Enterprise Server
API Robot		Yes
SCSI Control		No
LAN Control		Yes
Remote Robot Control		No. Each host that has ACS drives attached has robotic control.
NDMP Support		Yes
Shared Drives Support		Yes
Drive Cleaning Support		No. Drive cleaning is managed by ACS library software.
Media Access Port Support		Yes, for eject only.
Media Manager Tracks Slots		No
Media Type Support		DLT, DLT2, DLT3, HCART, HCART2, and HCART3.
Hosts Supported		Windows (requires STK LibAttach software) and UNIX. Note: LibAttach for Windows is not available for servers running Windows 2003.
Barcode Support		Yes. Depends on ACS library software to obtain Media Manager media IDs. Barcodes must be the same as the media ID (1 to 6 characters).

ACS Robot Attributes (continued)

Attribute	NetBackup Server (ACS robots are not supported)	NetBackup Enterprise Server
Robot Examples		STK 97*xx*, STK L180, STK L700, and STK Powderhorn Silo.
For More Information		See the ACS appendix, "STK Automated Cartridge System (ACS)" on page 473.

LMF Robot Attributes

Attribute	NetBackup Server (LMF robots are not supported)	NetBackup Enterprise Server
API Robot		Yes
SCSI Control		No
LAN Control		Yes
Remote Robot Control		Yes
NDMP Support		No
Shared Drives Support		No
Drive Cleaning Support		No. Cleaning is managed by the robotic library.
Media Access Port Support		Yes
Media Manager Tracks Slots		No
Media Type Support		HCART, HCART2, and HCART3.
Hosts Supported		UNIX Solaris.

LMF Robot Attributes (continued)

Attribute	NetBackup Server (LMF robots are not supported)	NetBackup Enterprise Server
Barcode Support		Yes. Depends on LMF software to obtain the Media Manager media ID. Barcodes must be the same as the media ID (1 to 6 characters).
Robot Examples		Fujitsu F6458
For More Information		See the LMF appendix, "Fujitsu Library Management Facility (LMF)" on page 519.

ODL Robot Attributes

Attribute	NetBackup Server	NetBackup Enterprise Server
API Robot	No	No
SCSI Control	Yes	Yes
LAN Control	No	No
Remote Robot Control	No	No
NDMP Support	No	No
Shared Drives Support	No	No
Drive Cleaning Support	No	No
Media Access Port Support	Yes	Yes
Media Manager Tracks Slots	Yes	Yes
Media Type Support	REWR_OPT and WORM_OPT.	REWR_OPT and WORM_OPT.

ODL Robot Attributes (continued)

Attribute	NetBackup Server	NetBackup Enterprise Server
Hosts Supported	UNIX. Not all UNIX operating systems are supported, see the NetBackup support web site.	
Barcode Support	No, but the robot has inventory capability and can report if a slot in the robot contains media.	
Robot Examples	HP Optical Disk Libraries and HP SureStore Optical Libraries.	
For More Information	See the NetBackup Media Manager device configuration guide.	

RSM Robot Attributes

Attribute	NetBackup Server	NetBackup Enterprise Server
API Robot	Yes	Yes
SCSI Control	No	No
LAN Control	No	No
Remote Robot Control	No	No
NDMP Support	No	No
Shared Drives Support	No	No
Drive Cleaning Support	No. Drive cleaning is supported using the RSM administrative interface on the Microsoft Windows operating systems that support RSM robots.	
Media Access Port Support	Eject is supported. Inject is not supported, but you can use the RSM Inject wizard on the Microsoft Windows operating systems that support RSM.	
Media Manager Tracks Slots	No	No
Media Type Support	4MM, 8MM, 8MM2, 8MM3, DLT, DLT2, DLT3, HCART, HCART2, HCART3, and QIC.	

RSM Robot Attributes (continued)

Attribute	NetBackup Server	NetBackup Enterprise Server
Hosts Supported	Microsoft Windows operating systems that support RSM.	
Barcode Support	Yes, if the robot supports barcodes. Barcodes must be the same as the Media Manager media ID (1 to 6 characters).	
Robot Examples	Exabyte 210 and Quantum DLTStor.	
For More Information	See the RSM appendix in the NetBackup Media Manager system administrator's guide for Windows.	

TL4 Robot Attributes

Attribute	NetBackup Server	NetBackup Enterprise Server
API Robot	No	No
SCSI Control	Yes	Yes
LAN Control	Not Applicable	No
Remote Robot Control	Not Applicable	No
NDMP Support	No	No
Shared Drives Support	Not Applicable	No
Drive Cleaning Support	Yes	Yes
Media Access Port Support	No	No
Media Manager Tracks Slots	Yes	Yes
Media Type Support	4MM	4MM
Hosts Supported	Windows and UNIX.	Windows and UNIX.
Barcode Support	No, but the robot has inventory capability and can report whether a slot in the robot contains media.	

TL4 Robot Attributes (continued)

Attribute	NetBackup Server	NetBackup Enterprise Server
Robot Examples	ADIC 4mm DAT Autochanger and HP DAT Autoloader.	
For More Information	See the NetBackup Media Manager device configuration guide.	

TL8 Robot Attributes

Attribute	NetBackup Server	NetBackup Enterprise Server
API Robot	No	No
SCSI Control	Yes	Yes
LAN Control	Not Applicable	No
Remote Robot Control	Not Applicable	Yes
NDMP Support	Yes	Yes
Shared Drives Support	Not Applicable	Yes
Drive Cleaning Support	Yes	Yes
Media Access Port Support	Yes	Yes
Media Manager Tracks Slots	Yes	Yes
Media Type Support	8MM, 8MM2, and 8MM3.	8MM, 8MM2, and 8MM3.
Hosts Supported	Windows and UNIX.	Windows and UNIX.
Barcode Support	Yes. Barcodes can be from 1 to 16 characters. Note: the Media Manager media ID will be six or less characters.	
Robot Examples	IBM 7331, Qualstar 46120, ADIC Scalar 100 AIT, ADIC Scalar 1000 AIT, Overland Data LoaderXpress, and Exabyte X200.	
For More Information	See the NetBackup Media Manager device configuration guide.	

TLD Robot Attributes

Attribute	NetBackup Server	NetBackup Enterprise Server
API Robot	No	No
SCSI Control	Yes	Yes
LAN Control	Not Applicable	No
Remote Robot Control	Not Applicable	Yes
NDMP Support	Yes	Yes
Shared Drives Support	Not Applicable	Yes
Drive Cleaning Support	Yes	Yes
Media Access Port Support	Yes	Yes
Media Manager Tracks Slots	Yes	Yes
Hosts Supported	Windows and UNIX.	Windows and UNIX.
Media Type Support	DLT, DLT2, DLT3, DTF, 8MM, 8MM2, 8MM3, QIC, HCART, HCART2, and HCART3.	
Barcode Support	Yes. Barcodes can be from 1 to 16 characters in length. Note: the Media Manager media ID will be six or less characters.	
Robot Examples	ADIC Scalar 1000 DLT, ATL D7000, STK L Series, and Overland Data Neo series	
For More Information	See the NetBackup Media Manager device configuration guide.	

TLH Robot Attributes

Attribute	NetBackup Server (TLH robots are not supported)	NetBackup Enterprise Server
API Robot		Yes
SCSI Control		No
LAN Control		Yes
Remote Robot Control		Yes
NDMP Support		Yes
Shared Drives Support		Yes
Drive Cleaning Support		No. Cleaning is managed by the robotic library.
Media Access Port Support		Yes
Media Manager Tracks Slots		No
Media Type Support		HCART, HCART2, and HCART3.
Hosts Supported		Windows and UNIX.
Barcode Support		Yes. Depends on IBM ATL software to obtain the Media Manager media ID. Barcodes must be the same as the media ID (1 to 6 characters).
Robot Examples		IBM 3494 and IBM VTS
For More Information		See the TLH appendix, "IBM Automated Tape Library (ATL)" on page 493.

TLM Robot Attributes

Attribute	NetBackup Server (TLM robots are not supported)	NetBackup Enterprise Server
API Robot		Yes
SCSI Control		No
LAN Control		Yes
Remote Robot Control		No. Each server that has TLM drives attached has robotic control.
NDMP Support		No
Shared Drives Support		Yes
Drive Cleaning Support		Yes
Media Access Port Support		Yes
Media Manager Tracks Slots		No
Media Type Support		4MM, 8MM, 8MM2, 8MM3, DLT, DLT2, DLT3, DTF, HCART, HCART2, HCART3, REWR_OPT (HP9000-800 only), and WORM_OPT (HP9000-800 only).
Hosts Supported		Windows and UNIX.
Barcode Support		Yes. Depends on DAS/SDLC software to obtain the Media Manager media ID. Barcodes must be the same as the media ID (1 to 6 characters).
Robot Examples		ADIC AML/J, ADIC AML/S, and ADIC Scalar 10000.

TLM Robot Attributes (continued)

Attribute	NetBackup Server (TLM robots are not supported)	NetBackup Enterprise Server
For More Information		See the TLM appendix, "ADIC Distributed AML Server / Scalar Distributed Library Controller" on page 507.

TS8 Robot Attributes

Attribute	NetBackup Server	NetBackup Enterprise Server
API Robot	No	No
SCSI Control	Yes	Yes
LAN Control	Not Applicable	No
Remote Robot Control	Not Applicable	No
NDMP Support	No	No
Shared Drives Support	Not Applicable	No
Drive Cleaning Support	Yes	Yes
Media Access Port Support	No	No
Media Manager Tracks Slots	Yes	Yes
Media Type Support	8MM, 8MM2, 8MM3.	8MM, 8MM2, 8MM3.
Hosts Supported	Windows and UNIX.	Windows and UNIX.
Barcode Support	Yes. Barcodes can be from 1 to 16 characters in length. Note: the Media Manager media ID will be six or less characters.	
Robot Examples	Exabyte 10x and Exabyte 210.	Exabyte 10x and Exabyte 210.

TS8 Robot Attributes (continued)

Attribute	NetBackup Server	NetBackup Enterprise Server
For More Information	See the NetBackup Media Manager device configuration guide.	

TSD Robot Attributes

Attribute	NetBackup Server	NetBackup Enterprise Server
API Robot	No	No
SCSI Control	Yes	Yes
LAN Control	Not Applicable	No
Remote Robot Control	Not Applicable	No
NDMP Support	Yes	Yes
Shared Drives Support	Not Applicable	No
Drive Cleaning Support	Yes	Yes
Media Access Port Support	No	No
Media Manager Tracks Slots	Yes	Yes
Media Type Support	DLT, DLT2, and DLT3.	DLT, DLT2, and DLT3.
Hosts Supported	Windows and UNIX.	Windows and UNIX.
Barcode Support	No, but the robot has inventory capability and can report whether a slot in the robot contains media.	
Robot Examples	Sun StorEdge L280 and Quantum DLTStor.	
For More Information	See the NetBackup Media Manager device configuration guide.	

TSH Robot Attributes

Attribute	NetBackup Server	NetBackup Enterprise Server
API Robot	No	No
SCSI Control	Yes	Yes
LAN Control	Not Applicable	No
Remote Robot Control	Not Applicable	No
NDMP Support	No	No
Shared Drives Support	Not Applicable	No
Drive Cleaning Support	Yes	Yes
Media Access Port Support	Yes	Yes
Media Manager Tracks Slots	Yes	Yes
Media Type Support	HCART, HCART2, and HCART3.	
Hosts Supported	UNIX. Not all operating UNIX systems are supported, see the NetBackup support web site.	
Barcode Support	No, but the robot has inventory capability and can report whether a slot in a robot contains media.	
Robot Examples	IBM 3590 B11 Autoloader.	IBM 3590 E11.
For More Information	See the NetBackup Media Manager device configuration guide.	

Table-Driven Robotics

Table-driven robotics provides support for some new robotic library devices without the need to modify any library control binaries. This feature uses the device mapping file for supported robots and drives.

This means that support for your new or upgraded devices may be accomplished without waiting for a maintenance patch from VERITAS. Since the device mapping file includes pertinent information relating to the operation and control of libraries, support for some new devices may only require that you download an updated mapping file when any device changes are made to your configuration.

See "The Device Mapping File" on page 36 for information on how to download the latest mapping file for your devices.

Robotic Test Utilities

You can use the robotic test utilities for configured robots by executing `/usr/openv/volmgr/bin/robtest` and selecting the desired type of robotic library.

From each test utility, you can obtain a list of available test commands by entering a question mark (?).

The following point applies only to NetBackup Enterprise Server.

Use the `drstat` command to determine the drive addressing parameters for ACS, LMF, TLH, and TLM robot types. This command is available in the robotic test utilities for these robot types. For most robot types, the drive addressing parameter is the robot drive number. For ACS robot types, drives are addressed by ACS, LSM, Panel, and Drive number. For TLH robot types, drives are addressed by the IBM device number. For TLM robot types, drives are addressed by the DAS/SDLC drive name.

Frequently Asked Questions About Device Discovery

NetBackup provides device discovery and auto-configuration on all supported operating system server platforms (except NetWare servers) and for supported peripherals. The following sections cover frequently asked questions about device discovery and auto device configuration in NetBackup.

What is device discovery?

Device discovery is an exploratory method used by Media Manager to determine which peripheral devices are visible from a given host. Visibility depends on physical attachment (SCSI, Fibre, and so on), device state (on and responding, or off and not responding), and host-based system device-layer configuration.

Discovery is done by sending SCSI commands through operating system device files (on UNIX) or APIs (on Windows servers) which support SCSI pass-through. Note that if there is no pass-through path to access a device, the device is not discovered or recognized.

What is the goal of device discovery?

The goal is to provide information to enable fully automated or partially-automated configuration of peripherals for use with NetBackup.

Device discovery must be accurate, timely, and provide coverage for typical NetBackup configurations.

Device discovery returns data needed to correlate devices that may be interconnected across multiple hosts or even multiple host bus adapters on the same host.

What is device serialization?

Serialization means that devices are uniquely identified by a serial number. Device relationships can be determined based on comparing serial numbers from multiple sources referring to the same device. If both a robotic library and a drive fully support serialization, the drive's position (or address) in the robotic library can be determined.

What types of devices can be auto-discovered by NetBackup?

The following types of devices can be discovered:

- SCSI-based robotic libraries (for example, changers, autoloaders, stackers).
- SCSI-based tape drives.
- Native parallel SCSI, fibre channel fabric (FCP) and FC-AL (loop) connections.
- SCSI over IP (reported).
- Devices that are attached to certain NDMP filers.

How does device discovery fit into the NetBackup architecture?

This is a NetBackup Enterprise Server topic.

NetBackup is based on a static configuration of devices. These configurations are persistent for robotic libraries, and tape or optical drives in device databases on each NetBackup media server (or SAN media server). These databases have data structures that are managed by the following:

- The NetBackup GUIs
- Device configuration wizards
- The `tpconfig` command.
- An internal API

A subset of device configuration information plus extra discovered attributes is managed in a central database called the global device database. The global device database host is defined at installation time and should be unique for all media servers (or SAN media servers) sharing devices in a multiple server configuration. See “Media and Device Management Domain Management” on page 297.

When `ltid` (the Media Manager device daemon on UNIX or the NetBackup Device Manager service on Windows servers) starts up, it reads the local device database into a shared memory segment. Components on the same host communicate using shared memory IPC or socket protocols. Socket protocols are used between components across multiple hosts. Command line interfaces are available to obtain run-time (shared memory) information and static device configuration information.

How does the Device Configuration wizard use device discovery?

Device discovery is initiated by the Device Configuration Wizard. This wizard is activated as part of the NetBackup Getting Started Wizard. From a list of hosts to be discovered, the wizard issues device discovery queries to all the hosts and correlates the data returned. A tree view of the devices is presented in the wizard, which allows drives to be dragged and dropped between specific addresses in a robotic library and the group of standalone (non-robotic) drives if required.

If the devices are fully serialized, no dragging and dropping is required. Device configuration changes are made as needed across all hosts where device discovery was requested. `ltid` is stopped and restarted to activate the latest device configuration.

The device configuration wizard can be used again if the physical device configuration has changed or if it needs to be verified. However, `ltid` cannot be stopped and restarted while NetBackup activity is in progress, which means that jobs should not be running when the device configuration wizard is invoked.

Does NetBackup require all of its devices to be discoverable?

No. Using device discovery and the Device Configuration wizard is the recommended and easiest-to-use method for creating and updating your device configurations. In addition, NetBackup supports a varied set of devices that are not currently auto-discovered, as well as some devices that are currently undiscoverable (for example, ACS, TLM, LMF, and RSM robots) without some user intervention. The Media Manager manual-based device configuration interfaces are still used in these cases.

How can the device configuration be viewed and verified?

You can view and check your device configuration by using one of the following device configuration interfaces available in NetBackup:

- Media and Device Management for UNIX
- Media and Device Management for Windows
- Menu-based device configuration interface (`tpconfig` on UNIX)
- Command line interface for device configuration (`tpconfig -d` command)

Your device configuration can be verified by using one of the following. Some details of a device configuration cannot be validated without attempting tape mounts. Robotic test utilities (using `robtest`) are available for extended device and configuration testing.

- Re-run the Device Configuration wizard.
- Use the Configuration Analyzer that is available from Media and Device Management for UNIX.

Why doesn't NetBackup detect whether drives are available from all hosts?

This is a NetBackup Enterprise Server topic.

NetBackup polls locally-attached non-shared drives on the hosts where they are configured when they are in the UP state and are not in use. However for shared drives, polling is done only on the Scan Host until a mount request is received from NetBackup. During a mount request, polling is transferred to the host requesting the mount once a drive has been selected.

This design enables NetBackup to support Dynamic Loop Switching or SAN zoning. Every drive needs to be visible only from a single-host perspective. Each drive can potentially have its own Scan Host that switches dynamically for error handling and continued availability. A central device arbitrating component (vmd/DA) manages scan host assignments for shared drives. vmd/DA also handles a network drive reservation system so that multiple media servers (or SAN media servers) can efficiently share a drive.

Polling a shared drive from a single host is not a complete solution. It allows dynamic loop switching and reduces the number of device accesses and associated CPU time, but it does not allow for breakages in device connectivity (for example, discontinuity in the fibre channel fabric) to be detected until the device is actually used for I/O.

How NetBackup Uses SCSI Reserve/Release

The following topics explain how SCSI reserve/release is used by NetBackup in SSO and non-SSO environments:

- "Background Topics" on page 321
- "How NetBackup Uses SCSI Reserve/Release Commands" on page 323
- "Issuing Reset Commands to Break a Reservation" on page 327
- "Controlling SCSI Reserve/Release" on page 328
- "SCSI Reserve/Release Requirements and Limitations" on page 328

Background Topics

The following topics explain a major change in the implementation of NetBackup SSO and an overview of the SCSI reserve/release functionality.

NetBackup Releases Prior to NetBackup 4.5

In previous releases of NetBackup, Media Manager used a network protocol for drive reservations. In some situations, this allowed any program outside the local NetBackup realm to access drives without NetBackup being aware of the fact (this was true for drives in SSO and SAN configurations, and also for non-SSO locally attached drives).

In SAN configurations, NetBackup could have a drive open for read or write operations on one host and the device could be accessed by another host. This situation could occur since there was no single tape driver controlling access to the device. If an external program moved the tape for any reason during a NetBackup operation, data corruption could be the result, since NetBackup assumed the tape position was unchanged from the last command NetBackup had issued to the drive.

NetBackup 4.5 and Later Releases

In multiple-initiator (multiple HBA) environments (such as SSO configurations), some form of device-level protection is required to avoid unintended sharing of tape devices and possible data loss problems. The only widely available technique for this purpose is to use SCSI reserve / release functionality.

Starting with release 4.5, NetBackup uses SCSI reserve / release commands to improve data integrity. SCSI reserve / release operates at the SCSI target level and depends on the fibre-to-SCSI bridge or the native fibre device hardware working correctly.

SCSI Reserve/Release Commands

When a device receives a SCSI reserve command, it will no longer process commands from any other HBA until the reserving HBA issues the SCSI release command. If an application sends a command to a reserved device, the device will fail the command by returning a status of RESERVATION CONFLICT. The only exceptions to this action are the Inquiry, Log Sense, Report LUNs, and Request Sense commands, which will return the requested information.

A device stays reserved until one of the following actions occurs. The device is

- Released by the HBA that reserved it.
- Released by some sort of TARGET or LOGICAL UNIT RESET. These resets are protocol dependent, and differ between parallel SCSI and FCP (SCSI on fibre channel). These resets may be issued from any HBA.
- Power cycled.
- Released by fibre channel LOGO / PLOGO / PRLI / PRLO / TPRLO or failed discovery (link actions).

A negative effect of SCSI reserve can occur if the reserving HBA stops working (for example, due to a system crash or hardware failure). All devices reserved by the HBA stay reserved until the reservation is removed or broken. The reservation can only be removed by the original HBA, which means the system must be available. In the case of a hardware failure, this is not possible.

To break a reservation the device must be reset. This can be done by any of the following:

- SCSI reset
- Bus device reset
- LUN device reset
- Power cycle
- Fibre channel link actions may break reservations.

SCSI reserve and SCSI release commands are mandatory for all SCSI-2 and SCSI-3 devices. See the SCSI 2 standard for a detailed description of SCSI reserve command operation and behavior.

How NetBackup Uses SCSI Reserve/Release Commands

The following topics explain how NetBackup uses SCSI reserve/release commands in an SSO environment (or any other multiple-initiator environment). The same basic operations are performed by other VERITAS applications (for example, VERITAS Storage Migrator components).

Issuing the Reserve

This topic applies to HP-UX, IRIX, Solaris, AIX, TRU64, Linux, and Windows servers.

The NetBackup processes (`bptm`, `bprecover`, and `bpbackupdb`) that read or write tape media issue a SCSI reserve command to the tape device that contains the media in use (during the open process). Once the reservation is established, all other HBAs are locked out of this tape device. This reservation prevents other HBAs from issuing commands that can cause data loss.

This reservation *does not* prevent other applications from using the same device on the server with the reservation and causing data loss (for example, someone issuing a UNIX `mt` command).

Checking for Data Loss

This topic applies to HP-UX, Solaris, AIX, TRU64, Linux, and Windows servers.

The `bptm` process detects data loss by reading the tape position and then checking the actual position against the expected position. If the actual position is less than the expected position (at the end of the backup process), the following will occur:

- The tape is frozen.
- The backup fails.
- The following error message entry is placed in the error log:

```
FREEZING media id xxxxxx, External event caused rewind during
write, all data on media is lost
```

Possible Causes

If the SCSI reserve/release feature is not enabled on your servers, data loss can be caused by configuration errors, incorrect paths, multiple master servers, incorrect SSO configurations and third-party or operating system utilities. If the SCSI reserve/release feature is enabled on all servers, then the cause could be third-party or operating system utilities running on the server that is also running the backup operation.

Unfortunately data loss cannot be prevented, just recognized after the fact. The NetBackup catalog is not cleaned up to remove information on prior backup sessions that were lost. The `bpexpdate` command must be run on the media id to clean up the catalog.

Disabling the Position Check

VERITAS recommends that the check for data loss *not be* disabled.

▼ To disable the position check on UNIX servers

❖ Create the following file:
`/usr/openv/netbackup/db/config/NO_POSITION_CHECK`

▼ To disable the position check on Windows servers

❖ Create the following file:
install_path`\netbackup\db\config\NO_POSITION_CHECK`

Checking for Tape/Driver Configuration Errors

This topic applies to HP-UX, Solaris, AIX, TRU64, Linux, and Windows servers.

The `bptm` process detects data loss by reading the tape position and then checking the actual position against the expected position. Any configuration problem that causes the actual position to be greater than the expected position (at the end of the backup process), causes the following to occur:

- The tape is frozen.
- The backup fails.
- The following error message entry is placed in the error log:

  ```
  FREEZING media id xxxxxx, too many data blocks written, check
  tape/driver block size configuration
  ```

The backup data may be usable, in which case the image will need to be imported before restores can be done (using the `bpimport` command).

Possible Causes

The source of the configuration problem needs to be identified and corrected. The most common configuration error is the failure to configure the driver for variable length blocks.

A second source of the error could be in the tape driver's configuration data. On Solaris, this could be in `/kernel/drv/st.conf`. Review the NetBackup Media Manager device configuration guide for the operating system you are using.

Disabling the Position Check

VERITAS recommends that the check for data loss *not be* disabled.

▼ **To disable the position check on UNIX servers**

❖ Create the following file:
`/usr/openv/netbackup/db/config/NO_POSITION_CHECK`

▼ **To disable the position check on Windows servers**

❖ Create the following file:
install_path`\netbackup\db\config\NO_POSITION_CHECK`

Issuing the Release

After a NetBackup process has finished with the media, a SCSI release is issued as part of the unmount operation. This release frees the device for access by another HBA.

Also, at the beginning of the startup process `avrd` issues a SCSI release to all configured tape devices that are currently in the Up state. This is done to release devices that were reserved at the time of a system re-boot or crash. The SCSI release command will return tape devices to general availability after a system crash.

Error Recovery

To recover a device that is reserved by an HBA that crashes or otherwise was unable to issue the SCSI release command, you can use the following option for the Media Manager `vmoprcmd` command:

```
vmoprcmd -crawlreleasebyname drive_name
```

This option requests all hosts that are registered to use the drive to release the drive (using the SCSI release command).

Issue the `vmoprcmd` command on the host that is the device allocator (DA host) or use the -h option on the command to specify the DA host.

Caution You can use this command after a PEND status has been displayed in **Device Monitor** in the NetBackup Administration Console, but do not issue this command during backups.

See the NetBackup commands for UNIX or Windows for the complete syntax and more information on using the `vmoprcmd` command.

SCSI Reserve/Release Logging and Conflict Notification

The `bptm` process logs all SCSI reserve/release commands. The `bptm` log should be checked on all hosts to ensure the SCSI reserve operation is being logged (look for SCSI RESERVE in the log).

The `avrd` process monitors all tape devices. NetBackup manages access to tape devices, such that a properly configured system will not receive the RESERVATION CONFLICT status from a tape device.

Reservation Conflict

If `avrd` gets a RESERVATION CONFLICT status, `avrd` changes the status of the device to PEND and writes the following message in the system log:

```
Reservation Conflict status from DRIVENAME (device NUMBER)
```

When the conflict is resolved, the following message will be written to the log:

```
Reservation Conflict status cleared from DRIVENAME (device NUMBER)
```

If this conflict occurs, some sort of mis-configuration is present (for example, the tape drive is reserved, but should not be) and the configuration problem should be corrected. A possible cause of this conflict is if an operating system crashes or a hardware failure has left a device reserved (see "Issuing the Release" on page 325).

Also in the **Device Monitor** or the output from the `vmoprcmd` command, PEND in the Control column means that a reservation conflict has occurred.

Server Operating System Limitations

This topic applies to HP-UX, TRU64, and Windows servers.

These operating systems cannot distinguish between a reserved device and a busy device. For these systems PEND will be reported in the Device Monitor, if another application is using the device. This indicates a mis-configuration, as NetBackup cannot share tape devices with other applications. If you are using other applications, you should use the `tpreq` command or Down the drive before using the drive.

These operating systems also may report PEND if the drive reports Busy when a volume is unmounted. You can use the AVRD_PEND_DELAY entry in the Media Manager configuration file to filter out these extraneous reports.

Server Operating System Limitations

This topic applies to IRIX servers.

This operating system cannot detect that a device is reserved. If the SSO scan host is running on an IRIX system, no indication of this configuration problem will occur.

Issuing Reset Commands to Break a Reservation

On the following operating systems, you can try to reset a reservation conflict by using the associated reset commands.

Caution The reset operation may reset other devices in your configuration. Loss of data is also possible. Alternate methods of breaking the reservation on a device (using switch and bridge hardware) should be tried first.

▼ To reset a reservation on Sun Solaris

1. Issue `mt -f` *drive_path_name* `forcereserve`.
2. Issue `mt -f` *drive_path_name* `release`.

See the `mt(1)` man page for more information.

▼ To reset a reservation on HP-UX

❖ Issue `st -f` *drive_path_name* `-r`.

See the `st(1m)` man page for more information.

▼ To reset a reservation on IBM AIX

❖ Issue `tctl -f` *drive_path_name* `reset`.

See the `tctl` man page (in the IBM AIX Commands Reference) for more information.

▼ To reset a reservation on SGI IRIX

Issue either of the following commands:

❖ `scsiha -r` *bus_number*

❖ `scsiha -L` *target_number bus_number*

See the `scsiha(1m)` man page for more information.

Controlling SCSI Reserve/Release

In NetBackup 4.5 and later releases, using SCSI reserve for data integrity is on by default. SCSI reserve can be disabled by using an entry in the UNIX `bp.conf` file or in the registry on Windows servers.

The `bp.conf` file can be modified to contain a `DISABLE_SCSI_RESERVE` entry, which will turn off the use of SCSI reserve to all tape devices from this host.

The NetBackup UNIX and Windows GUIs have a checkbox to add or remove this entry in the `bp.conf` file or the registry. Select **NetBackup Management** > **Host Properties**. Select a master or media server (or SAN media server) in the right pane and then **Properties** > **Media > Disable SCSI Reserve**.

SCSI Reserve/Release Requirements and Limitations

The requirements are as follows:

- There must be passthru driver access to all shared drives. The passthru driver must be installed and all required paths must be created.

  See the NetBackup Media Manager device configuration guide for information on configuring and using the passthru driver for various UNIX operating systems.
- Host operating systems must be properly coordinated with the requirements of the NetBackup use of SCSI reserve/release.
- Users of Solaris 7 must install a ST driver patch to avoid a problem that keeps the device reserved when it should not be. For Solaris 7, the minimum patch level required is 107460-06.
- Users of HP-UX must disable the operating system's use of SCSI reserve/release.

See the topic, Enabling SCSI Reserve / Release in the HP 9000 chapter of the NetBackup Media Manager device configuration guide for instructions.

This VERITAS implementation using SCSI reserve / release has the following limitations:

- SCSI reserve / release is not applicable for NDMP drives (no reserve command is available).
- Third-party copy configurations must be configured correctly. To retain reservation of a tape device when doing a third-party copy backup, refer to the description of the `mover.conf` file in the *NetBackup ServerFree Agent System Administrator's Guide for UNIX*.
- Cluster environments or multi-path environments with fail-over capability may leave devices reserved when fail-over occurs. If the fail-over does not break the device reservations, then the NetBackup use of SCSI reserve / release must be disabled.
- Cluster environments or multi-path environments with dynamic path sharing (TRU64 systems, for example) will cause backup and restore failures if the path changes. If path sharing cannot be eliminated, then the NetBackup use of SCSI reserve / release must be disabled.

Correlating Device Files to Physical Drives When Adding Drives

The following two topics may not be necessary if you used the Device Configuration Wizard to configure your drives and the drives and robotic libraries both support device serialization.

The following point applies only to NetBackup Enterprise Server.

If you are configuring shared drives, see “Shared Storage Option (SSO) Topics” on page 269 for more information.

On Windows Hosts

When selecting the drive address (for example, robot drive number) for a tape drive, match the logical device name with the drives in the physical drive layout as follows:

▼ To correlate device files

1. Note the SCSI target of the drive and check the Windows Tape Devices display to determine which device name (for example, Tape0) was assigned to the drive.

2. Correlate the SCSI target to the drive address using the robot's interface panel or checking the indicators on the rear panel of the tape drive.

3. Determine the physical drive address (for example, number) by checking labels on the robot.

4. Configure the robot and then add the drives.

   When you add the drives, check your notes to ensure that you are assigning the correct drive address to each device path.

5. Optionally, use the appropriate robotic test utility to verify the configuration.

   a. Stop the NetBackup Device Manager service (`ltid`).

   b. Start `ltid` to start the Automatic Volume Recognition process (`avrd`). You must stop and restart `ltid` to ensure that the current device configuration has been activated.

      The following point applies only to NetBackup Enterprise Server.

      Also start the remote robotic control process, if robotic control is not local to this host.

   c. Use the robotic test utility to mount a tape on a drive.

   d. Use the Device Monitor to verify the tape was mounted on the correct robot drive.

   For example, assume you have the following drives in a TLD robot and have the device names configured as follows:

   Drive 1: `Tape0`

   Drive 2: `Tape1`

   Drive 3: `Tape2`

   Also assume that in step c you requested that the tape be mounted on Drive 1. If the device name for the drive is correctly configured, the Device Monitor shows the tape mounted on Drive 1. Unload and unmount the tape from Drive 1 using the robotic test utility. Repeat the test for each drive.

During your testing, if the Device Monitor shows the tape mounted on a drive other than the drive you specified in the test utility, the device name for that drive is not correctly configured. For instance, if you mounted a tape on Drive 2 and the Device Monitor shows the tape mounted on Drive 3, the device name for Drive 2 is incorrect. Replace the Drive 2 device name (`Tape1`) with the correct device name (`Tape2`) for Drive 3. You may need to use a temporary device name while making these changes. In this case, you also know that the device name for Drive 3 is incorrect. Possibly, the device names were swapped during configuration.

The following point applies only to NetBackup Enterprise Server.

It may be necessary to unload the drive with a command from another host or from the drive's front panel, if the true data path to the drive where the tape was mounted is not on the host with direct robotic control.

On UNIX Hosts

Establish device file to physical drive correlation during installation when you create the device files for each drive. The following is a general procedure:

▼ To correlate device files

1. Determine the physical location of each drive within the robotic library. This is usually shown on the connectors to the drives or in the vendor's documentation.

2. Physically connect the drives to SCSI adapters in your host.

3. Record the adapter and SCSI addresses to which you connected each drive.

4. Create device files for each drive based on the SCSI addresses of the drives and adapters. Add the device file using your notes from step 3 to complete the correlation between device files and physical drive location.

5. Configure the robot and then add the drives.

   When you add the drives, check your notes to ensure that you are assigning the correct drive address (for example, robot drive number) to each device path.

6. Optionally, you can use the appropriate robotic test utility to verify the configuration.

   a. Stop the device daemon (`ltid`).

   b. Start `ltid` to start the Automatic Volume Recognition daemon (`avrd`). You must stop and restart `ltid` to ensure that the current device configuration has been activated.

The following point applies only to NetBackup Enterprise Server.

Also start the remote robotic control daemon, if robotic control is not local to this host.

c. Use the robotic test utility to mount a tape on a drive.

d. Use the Device Monitor to verify the tape was mounted on the correct robot drive.

For example, assume you have the following drives in a TLD robot and have the device paths configured as follows:

Drive 1: `/dev/rmt/0cbn`

Drive 2: `/dev/rmt/1cbn`

Drive 3: `/dev/rmt/3cbn`

Also assume that in step c you requested that the tape be mounted on Drive 1. If the device path for the drive is correctly configured, the Device Monitor shows the tape mounted on Drive 1. Unload and unmount the tape from Drive 1 using the robotic test utility. Repeat the test for each drive.

During your testing, if the Device Monitor shows the tape mounted on a drive other than the drive you specified in the test utility, the device path for that drive is not correctly configured. For instance, if you mounted a tape on Drive 2 and the Device Monitor shows the tape mounted on Drive 3, the device path for Drive 2 is incorrect. Replace the Drive 2 device path (`/dev/rmt/1cbn`) with the correct device path (`/dev/rmt/3cbn`) for Drive 3. You may need to use a temporary device path while making these changes. In this case, you also know that the device path for Drive 3 is incorrect. Possibly, the device paths were swapped during configuration.

The following point applies only to NetBackup Enterprise Server.

It may be necessary to unload the drive with a command from another host or from the drive's front panel, if the true data path to the drive where the tape was mounted is not on the host with direct robotic control.

Drive Cleaning

This section covers the following topics:

- "Available Types of Cleaning" on page 333
- "Reactive Cleaning (TapeAlert)" on page 333
- "Library-Based Cleaning" on page 335
- "Frequency-Based Cleaning" on page 335

- "Operator-Initiated Cleaning" on page 336
- "Using a Cleaning Tape" on page 337

Available Types of Cleaning

Media Manager has the following types of drive cleaning available:

- Reactive cleaning (also known as on-demand cleaning or TapeAlert cleaning).

  This type of cleaning is the recommended practice. See "Reactive Cleaning (TapeAlert)" on page 333.

- Library-based cleaning (also known as robotic cleaning or auto cleaning).

  This type of cleaning is not supported by Media Manager for most robots, since robotic library and operating systems vendors have implemented this cleaning in many different ways. These different methods often interfere with Media Manager robotic control operations. See "Library-Based Cleaning" on page 335.

- Frequency-based cleaning.

  This type of cleaning occurs when the accumulated mount time exceeds the time you specified for cleaning frequency. See "Frequency-Based Cleaning" on page 335.

- Operator-initiated cleaning.

  This type of cleaning can be performed regardless of the specified cleaning frequency or accumulated mount time. See "Operator-Initiated Cleaning" on page 336.

Reactive Cleaning (TapeAlert)

Reactive cleaning using TapeAlert is mainly a function of the tape drive. The drive determines and initiates the cleaning when needed. If a drive supports the TapeAlert capability and it is enabled on the drive, Media Manager polls the drive for status from TapeAlert.

TapeAlert allows reactive cleaning for most drive types. Not all platforms, robots, and drives, at all firmware levels, support this type of reactive cleaning.

In the cases where TapeAlert is not supported on a particular drive, frequency-based cleaning may be utilized (see "Frequency-Based Cleaning" on page 335 and "TapeAlert and Frequency-Based Cleaning" on page 334).

See the following topics:

- "Requirements for Using TapeAlert with Media Manager" on page 334
- "TapeAlert and Media Manager" on page 334

◆ "TapeAlert and Frequency-Based Cleaning" on page 334

Requirements for Using TapeAlert with Media Manager

To use TapeAlert, all of the following conditions must be true. No additional configuration is needed.

- VERITAS must support TapeAlert on the device host platform where the drive is connected.
- The drive must support the TapeAlert capability and the TapeAlert must be enabled on the drive.

  To determine if drives support TapeAlert, see the VERITAS support site for information on drive support for TapeAlert.
- A cleaning tape is configured and available in Media Manager for the robotic library.
- The cleaning tape being used has cleanings remaining.
- Passthru device files must be configured on UNIX media servers (see the Media Manager device configuration guide).

TapeAlert and Media Manager

A drive with TapeAlert capability tracks how many read and write errors it has encountered within a certain time period. Although these errors are recoverable, once a threshold is reached a CLEAN_NOW or CLEAN_PERIODIC flag is set by TapeAlert.

If Media Manager detects that either of these flags is set, it performs a cleaning at *one* of the following times:

- At the end of a backup or restore to the drive.
- Prior to the next backup or restore to the drive.

TapeAlert and Frequency-Based Cleaning

Using TapeAlert *with* frequency-based cleaning ensures that a drive will get cleaned at least every *x* hours, depending on the setting for the cleaning frequency. In addition, the drive may be cleaned sooner, if the CLEAN_NOW or CLEAN_PERIODIC TapeAlert flags are set by the drive.

When using TapeAlert *without* frequency-based cleaning, a drive will be cleaned only when the drive sets its CLEAN_NOW or CLEAN_PERIODIC flags.

Library-Based Cleaning

Cleaning media used for library-based cleaning is hidden from Media Manager (that is, cleaning media is not defined in the Media Manager volume database and the media is managed by the robotic library).

Since TapeAlert provides the same type of cleaning as library-based cleaning, VERITAS recommends that you disable library-based cleaning when using TapeAlert.

Frequency-Based Cleaning

When you add a drive or make changes to a drive, you can specify the number of hours (cleaning frequency) that a drive will be used between drive cleanings. Media Manager updates the mount time for the drive each time a tape is unmounted.

If the following conditions are met, drive cleaning occurs when the accumulated mount time exceeds the time you specified for cleaning frequency:

- The drive is in a robotic library that supports drive cleaning (see "Robot Attributes" on page 305).
- A cleaning tape is configured and available in Media Manager for the robotic library.
- The cleaning tape has cleanings remaining.

Media Manager cleans the drive immediately after a tape is unmounted. Drive cleaning never causes an unmount in the middle of an active backup. The mount time is reset after the drive is cleaned. The cleaning frequency value remains the same.

A cleaning can occur within a backup if you are spanning tapes. For example, if cleaning is due after the first tape is full, Media Manager cleans the drive before proceeding to the next tape.

Leaving media in a drive for extended periods does not affect cleaning frequency because Media Manager increments the mount time only when the media is actually assigned to a process.

See the following topics:

- "Frequency-Based Cleaning Limitations" on page 335
- "Managing Frequency-Based Cleaning" on page 336

Frequency-Based Cleaning Limitations

Frequency-based cleaning is *not* supported for the following devices.

- Drives in RSM libraries that are under API robotic control. On Windows operating systems that support RSM robots, the system software controls the drive cleaning. To manage drive cleaning, use the Windows RSM administrative interface.
- *The following applies only to NetBackup Enterprise Server.*

  Drives in ACS, LMF, or TLH libraries that are under API robotic control. The robotic library software controls the drive cleaning. To manage drive cleaning for these robots, use the robot vendor interfaces.
- *The following applies only to NetBackup Enterprise Server.*

  Shared drives, since there is no single device path where tape mounts can be accurately counted.

Check the Drive Cleaning Support Attribute of the tables in "Robot Attributes" on page 305.

Managing Frequency-Based Cleaning

The following procedures use the NetBackup Administration Console to manage drive cleaning. You can also use the `tpclean` command.

▼ To change the cleaning frequency value

❖ See "Dialog Entries for Adding (or Changing Drives)" on page 62.

▼ To perform an operator-initiated drive cleaning or to reset the mount time for a drive

❖ See "Drive Cleaning Functions" on page 73.

▼ To change the number of cleanings allowed for a cleaning tape

❖ See "Changing the Attributes for a Volume" on page 155 for configuration information.

Operator-Initiated Cleaning

You can perform an operator-initiated cleaning of a drive regardless of the cleaning frequency or accumulated mount time of the drive. You can clean standalone drives or robotic drives if a cleaning tape of the correct media type and residence for the drive has been added to the appropriate volume database.

If either of the following conditions are true

- The value for the mount time is greater than the cleaning frequency.

- The TapeAlert CLEAN_NOW flag is set.

and either of the following conditions are true

- The drive is a standalone drive and a cleaning tape is not defined.
- The drive is a standalone drive and no cleaning tape has any cleanings remaining.

then the message, NEEDS CLEANING, appears in the following displays:

- The Tape Cleaning Comment column of the Drive List in the **Devices** node of the NetBackup Administration Console.
- The comment field of the output from the `tpclean -L` command.

▼ **To perform an operator-initiated cleaning**

❖ See "Managing Frequency-Based Cleaning" on page 336.

Using a Cleaning Tape

Note Media Manager has no control over cleaning tapes that are used by library-based cleaning.

You can specify the number of cleanings that are allowed for a cleaning tape. This number is decremented with each cleaning, and when the number of cleanings is zero Media Manager stops using the cleaning tape. At this point, you can use a new cleaning tape or increase the number of cleanings allowed for the tape.

VERITAS suggests following the recommendations from cleaning tape vendors for the amount of tape usage. Using a cleaning tape past its recommended life can cause delays in the cleaning operation (due to excessive tape positioning) and potentialy lead to downed drives.

You can change the number of cleanings at any time. See "Managing Frequency-Based Cleaning" on page 336.

Volume Pools and Volume Groups

A volume pool is used to identify a logical set of volumes by usage.

A volume group is a logical grouping that identifies a set of volumes that reside at the same physical location. Volume groups are convenient for updating a configuration when moving volumes (for example, from robotic to standalone).

Volume pools and volume groups are specified when you add the volume to the Media Manager configuration.

See the following topics:

- "Volume Pools" on page 338
- "Volume Groups" on page 338
- "Volume Pool and Volume Group Example" on page 339
- "Scratch Volume Pools" on page 340
- "Moving Volumes" on page 342

Volume Pools

The volume pool concept is relevant only for NetBackup storage units managed by Media Manager and does not apply to disk storage units.

Associating volumes with a volume pool protects them from access by unauthorized users, groups, or applications. You can create volume pools for user groups or other reasons, and as you add volumes, associate them with the appropriate pool. You can also move unassigned volumes to a different pool later.

With the exception of the NetBackup and DataStore special volume pools, you must create a volume pool before you can add volumes to it. By default, Media Manager creates volume pools, named NetBackup and DataStore.

During initial configuration, it is easiest to create all of your volume pools first if you want to use volume pools other than the NetBackup volume pool. Then as you add volumes, you can assign them to these volume pools.

You can also configure a scratch volume pool (see "Scratch Volume Pools" on page 340).

Volume Groups

Volume groups are an administration tool for logically moving multiple volumes (where a logical move means to change the volume attributes to show the new location).

Using a volume group lets you move a set of volumes between a robotic library and a standalone location, or delete them from the configuration by specifying the group name, rather than each individual media ID of each volume. Volume groups are also convenient for tracking the location of volumes, such as the case when a group is moved off site.

Rules for Assigning Volume Groups

The following are the rules for assigning volume groups:

- All volumes in a group must be the same media type.

However, a media type and its corresponding cleaning media type are allowed in the same volume group (for example, DLT and DLT_CLN).

- All volumes in a robotic library *must* belong to a volume group. You cannot add volumes to a robotic library without specifying a group or having Media Manager generate a name for the group.
- The only way to clear a volume group name is to move the volume to standalone and not specify a volume group.
- More than one volume group can share the same location. For example, a robotic library can contain volumes from more than one volume group and you can have more than one standalone volume group.
- All volumes in a group must be in the same robotic library or be standalone. That is, Media Manager will not let you add a group (or part of a group) to a robotic library, if it already exists in another robotic library.

Volume Pool and Volume Group Example

The following figure shows an example with one volume pool (named NB_pool) and several volume groups. In this example, volumes can be moved between the groups in the robotic library and any groups that are off site. All volumes, however, remain in the same pool.

Volume Pool With Multiple Volume Groups

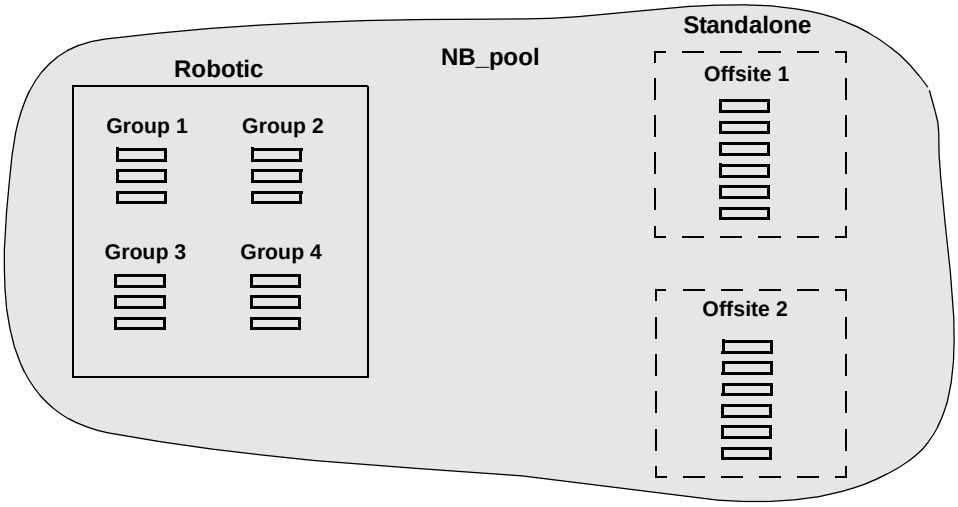

In the following figure, members of the same volume pools are in different volume groups. The important thing to notice in this example is that the data intended for use by different departments is kept on separate volumes by assigning different volume pools. The volumes in a pool can be in more than one physical location and in more than one volume group.

In this example, the volumes in the pool NB_pool_dept_1 are spread among the rob_A, standalone1, and offsite volume groups. These groups also have volumes from more than one pool (though the volumes in each group must all be the same type).

Volume Groups With Multiple Volume Pools

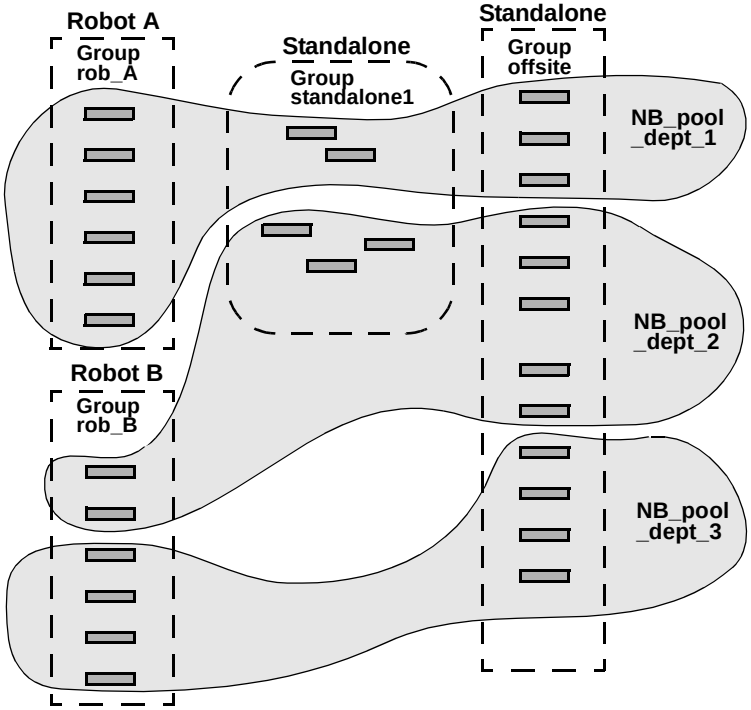

It is also possible to configure a scratch pool from which Media Manager can transfer volumes when another volume pool has no media available (see "Scratch Volume Pools" on page 340).

Scratch Volume Pools

The scratch pool is an optional volume pool that you can configure. Each media server (or SAN media server) in your configuration can have one scratch pool defined. If a scratch pool is configured, Media Manager moves volumes from that scratch pool to other pools that have do not have volumes available.

See "Adding a New Volume Pool or Scratch Volume Pool" on page 119 for configuration information.

Scratch Pool Example

In the following figure, the scratch pool is named Scratch_pool and the three robots contain volumes from that pool in addition to those from other pools. Assume the following sequence of evemts:

- NetBackup requires a DLT volume, so Media Manager attempts to assign one from NB_pool_dept_1 in Robot C.
- Robot C has no unassigned volumes available in the NB_pool_dept_1 pool.
- Media Manager searches the scratch pool for an unassigned DLT volume in Robot C. If there is an available volume, Media Manager moves it to NB_pool_dept_1 and assigns it to NetBackup. Otherwise, a media unavailable status is logged.

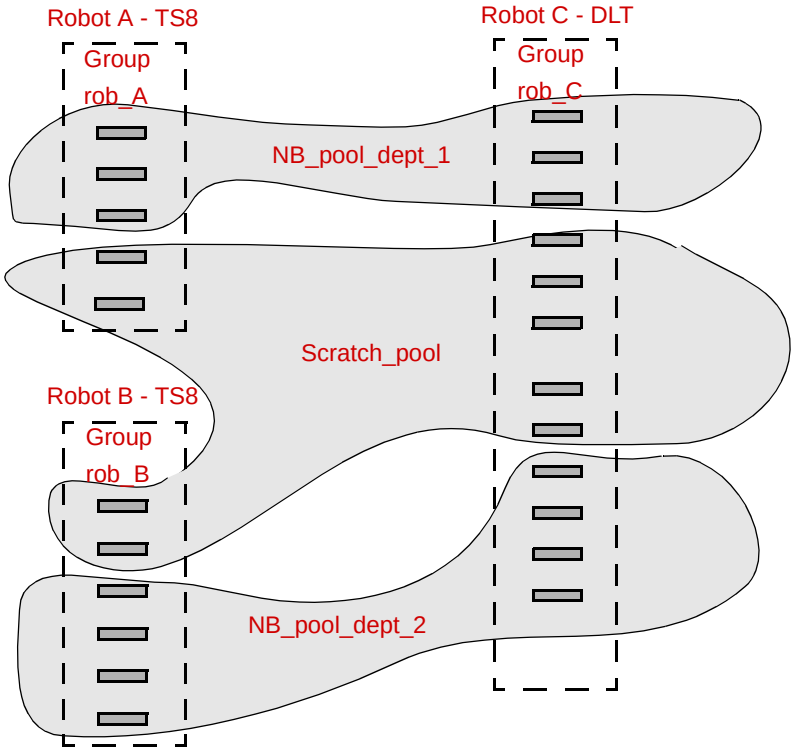

Scratch Pool Usage

The following list contains important notes about scratch pool usage:

- If the scratch pool contains assigned volumes, these volumes remain in the scratch pool. Media Manager does not move assigned volumes to other pools as it does with unassigned volumes.
- Media Manager will not assign volumes while they are in a scratch pool. For example if a NetBackup policy or schedule specifies the scratch pool, all requests for those volumes are denied.
- Media Manager returns expired media to the scratch volume pool automatically (media that is returned must have been originally in the same scratch pool).

  If this logical move is not desired, you can specify an entry in `vm.conf` to disable this behavior (see "Return Media to the Scratch Pool" on page 395). If this entry is used, the move must be done using **Media and Device Management** from the NetBackup Administration Console.
- To have Media Manager manage the allocation of your volumes to your volume pools, do the following:

  a. Create volume pools as required, but do not add any volumes to the pools.

  b. Define a scratch pool and add all of your volumes to it. Media Manager will move volumes to the other pools as they are needed.

Moving Volumes

Common instances when you move volumes are as follows:

- Replacing full volumes in a robotic library. When a volume is full and there are no more empty slots in the robotic library, you move the full volume to standalone and configure a volume for the empty slot, or move a volume into that slot. Use the same process to replace a defective volume.
- Moving volumes from a robotic library to an offsite location or from an offsite location into a robotic library. When you move tapes to an offsite location, you move them to standalone.
- Moving volumes from one robotic library to another (for example, if a robotic library is down).
- Changing the volume group for a volume or volumes.

Move Operations

In one move operation, you can move a single volume, multiple volumes, or combinations of single and multiple volumes. You are limited only in that you cannot move volumes to an invalid location (for example, DLT media to an 8 mm robot).

The best practice is to keep your moves simple by selecting and moving only one type of media at a time to a single destination. For example, if you have to move 8 mm and 4 mm cartridge tapes, do it in separate moves.

Physical and Logical Moves

When you move volumes in or out of a robotic library or from one robotic library to another, you must physically and logically move the volume, as follows:

- The physical part of the move is done when you insert or remove the volume. For some robot types, you can use Media Manager to physically move the volume (using Inject/Eject options).
- The logical part of the move is done when you use Media Manager to move volumes. Media Manager updates the volume database to show the volume at the *new* location.

The following figure shows an example of replacing a full volume with a new volume.

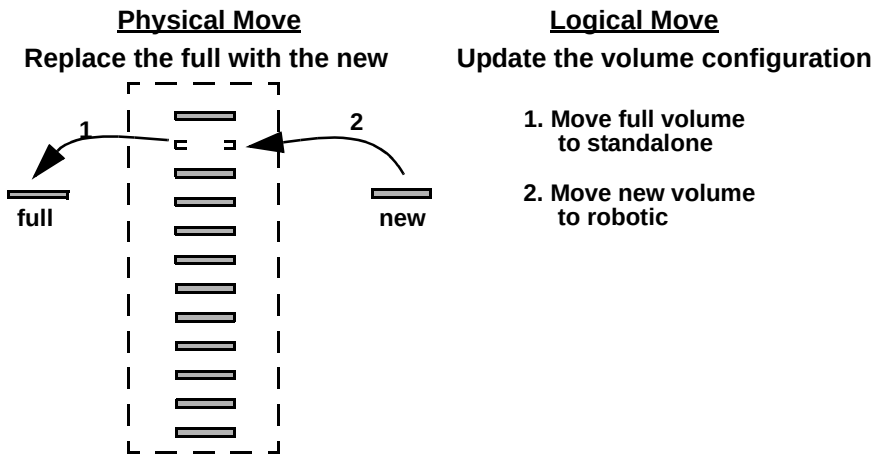

Barcodes

Reading barcodes on media is a function of the robotic library hardware. When a robotic library has a barcode reader, it scans the media for barcodes and saves the results. The results associate the slot number and the barcode with the media in that slot. Media Manager obtains this association from the robotic library.

See the following topics:

- "Barcode Advantages" on page 344
- "Barcode Best Practices" on page 344

- "Barcode Rules" on page 345
- "Media ID Generation Rules" on page 347

Barcode Advantages

VERITAS suggests that you use media with barcodes in robots that can read barcodes. Barcodes offer the following advantages:

- Automatic media ID assignment.

  When you add new media to a robot, Media Manager is able to assign media IDs according to the criteria that you specify.

- More accurate tracking of volume location.

  A Robot Inventory Update Volume Configuration operation can determine which volumes are in a robot.

- Increased performance.

  Media Manager functions well whether or not barcodes are used. However, not using barcodes can adversely affect performance for some robots.

  A robot that reads barcodes will perform a scan each time it moves a tape. This is normal and is done in order to store the correct barcode in memory or to verify a previously saved barcode. However, if a barcode is missing, the robot will retry the scan multiple times, degrading performance.

Barcode Best Practices

When selecting barcodes for your volumes consider the following important points:

- Barcodes usually appear on labels that you attach to the outside of tape volumes.

  Barcodes are not generally used on optical disks and Media Manager does not support barcodes for optical disk libraries (ODL robots).

- The maximum barcode lengths that are supported by Media Manager depend on the type of robot. See the Barcode Support attribute of the tables listed in "Robot Attributes" on page 305.

- When you purchase barcode labels for use with Media Manager, always follow the robotic library vendor's recommendations. Ensure that the barcodes have the correct number of characters.

- Barcodes can represent any combination of alpha and numeric characters, but different robots support different lengths of barcodes. See the robot vendor's documentation to determine the requirements for a specific robot type.

- Use barcodes without spaces (leading spaces, trailing spaces, or spaces between any characters). Otherwise, the robot or Media Manager can have difficulty interpreting them.
- Volumes in an API robot have a real or a logical barcode. This volume identifier is used as the Media Manager media ID. This volume identifier is the volume serial number in ACS, LMF, TLH, and TLM robots.

  For RSM robots, the last six characters of the media name are used as the volume identifier. If these characters contain spaces, only the characters back to the first space are used.
- For API robots, the barcode for a volume must be identical to the Media Manager media ID.

  You can match barcodes to media IDs by getting custom labels in the same series as your media IDs. For example, to match a set of media IDs from AA0000 to ZZ9999, get barcode labels in that series.
- When a robotic library can contain more than one media type, a good strategy for assigning barcodes is to assign specific characters in the barcode to different media types using media ID generation rules (see "Media ID Generation Rules" on page 347). Also recommended is to use barcodes to differentiate between data tapes and cleaning tapes, or to differentiate between volume pools.

Barcode Rules

A barcode rule specifies criteria for assigning attributes to new robotic volumes. These attributes are assigned by Media Manager using the barcode for the volume that is returned by the robotic library and your barcode rules.

In Media Manager, you choose whether to use barcode rules when you set up the robot inventory update operation. The barcode rules that are actually used by Media Manager are the rules that are stored on the volume database host that is the target of the robot inventory update operation.

Media Manager Actions for Barcodes

When a robot inventory update operation uses Media Manager barcode rules and a new barcode is detected in a slot, Media Manager searches the list of rules starting at the top and checks for a barcode tag that matches the new barcode. If a tag matches, the media type associated for the rule is checked to ensure that it is compatible with the type you specified for the robot update.

If the media type also matches, Media Manager uses the media type, volume pool, maximum number of mounts (or number of cleanings), and description in the rule when it assigns attributes in the volume database.

Note Media Manager will not use barcode rules for barcodes that are being used by existing volumes.

Example Barcode Rules

The following table shows some sample barcode rules. Rules are sorted first according to the number of characters in the barcode tag and then by the order you add them. Two exceptions are the <NONE> and <DEFAULT> rules, which are always located at the end of the list.

Sample Barcode Rules

Barcode Tag	Media Type	Volume Pool	Max Mounts/ Cleanings	Description
0080	8MM	b_pool	55	new 008 volumes
DLT	DLT	d_pool	200	dlt backup
CLD	DLT_CLN	None	30	dlt cleaning
CLT	8MM_CLN	None	20	8 mm cleaning
TS8	8MM	t_pool	0	8 mm backup
TS	8MM	None	0	8 mm no pool
<NONE>	DEFAULT	None	0	no barcode
<DEFAULT>	DEFAULT	NetBackup	0	other barcodes

Refer to the previous table showing sample barcode rules for the following examples.

Assume that you select the following media settings (update options) for the update operation for a new 8-mm volume in a TS8 robot:

Media Type = 8MM

Volume Group = 00_000_TS8

Use Barcode Rules = YES

Volume Pool = DEFAULT

If a new volume in this robotic library has a barcode of TS800001, Media Manager uses the rule with the barcode tag of TS8 and assigns the following attributes for the volume:

Media ID = 800001 (last six characters of barcode)

Volume Group = 00_000_TS8

Volume Pool = t_pool

Max Mounts = 0 (no maximum)

If a new volume has a barcode of TS000001, Media Manager uses the rule with the barcode tag of TS and assigns the following attributes for the volume:

Media ID = 000001 (last six characters of barcode)

Volume Group = 00_000_TS8

Volume Pool = None

Max Mounts = 0 (no maximum)

Media ID Generation Rules

Note To use media ID generation rules, the robot must support barcodes and the robot cannot be an API robot. Media ID generation rules are saved in the Media Manager configuration file (`vm.conf`).

Using media ID generation rules allows you to override the default media ID naming method used by Media Manager. The default method uses the last six characters of the barcode returned by the robot to generate the Media Manage media ID.

For example, two eight-character barcodes might be `S00006L1` and `000006L1`. If you do not specify any media ID generation rules, Media Manager uses the last six characters of the barcode to generate its media IDs. In this example, the same media ID for the two barcodes would be created (`0006L1`) .

You can control how media IDs are created by defining media ID generation rules that specify which characters of a barcode on tape will be used in the media ID. You also can specify that alphanumeric characters are to be inserted into the ID.

Rules can be defined with respect to a robot and barcode lengths. Multiple barcode creation entries can be specified, allowing the ID generation to be specific for each robot; or for each barcode format having different numbers of characters in the barcode. This allows flexibility for multi-media.

Using the Physical Inventory Utility for Non-Barcoded Media

A Media Manager robot inventory update is the automated operation of determining the location / slot of all media in the robotic library and updating the Media Manager volume database to synchronize it with the contents of the robotic library. A robotic inventory update, when invoked in any of the Media Manager interfaces, utilizes the `vmupdate` command to perform its functions.

`vmupdate` connects to the robotic control daemon and obtains a list of media known to the library. For robotic libraries having barcode readers and containing bar-coded media, the robotic inventory information is used for tracking the location of media, as `vmupdate` queries the volume database for its media information, and appropriately updates the volume database to match its contents to that of the robotic library.

See the following topics:

- "Why Use vmphyinv?" on page 348
- "When to Use vmphyinv" on page 349
- "How vmphyinv Performs a Physical Inventory" on page 350

Why Use vmphyinv?

For robotic libraries without barcode readers or libraries containing non-bar-coded media, only the presence of media in a robotic library slot is obtained. This information alone is not sufficient to perform automated media management. More information must be obtained. For non-barcoded media, it is necessary to mount the tape, read the tape header and determine which tape is in each slot.

The physical inventory utility, `vmphyinv`, performs a physical inventory on non-barcoded tape libraries by mounting the tape, reading the tape header, identifying the tape in each slot, and updating the Media Manager volume database.

For the complete syntax for the `vmphyinv` command, see `vmphyinv` in the NetBackup commands for UNIX or the NetBackup commands for Windows reference guides.

Features

`vmphyinv` has the following features:

- Can be invoked from any master or media server (or SAN media server).
- Can be used with barcoded tape libraries, because of the utility's value in verifying the contents of the media.
- Recognizes NetBackup, Backup Exec, and Storage Migrator (VSM) tape formats.

- Supports remote administration. You do not need to invoke `vmphyinv` from the host where the drives are attached.
- Tries to use multiple drives in a robot, even if the drives are attached to different hosts.
- *The following applies only to NetBackup Enterprise Server.*

  Works with shared drives (Shared Storage Option).
- Supports all SCSI-based robot types (except optical disk libraries).
- Can be used to inventory a single piece of media, in a standalone drive. The drive can be selected for inventory by specifying the `-u` *device_number* or `-n` *drive_name* option. The drive must contain media and it must be ready.

Requirements and Restrictions

`vmphyinv` has the following requirements and restrictions:

- At least one master or media server (host where the drives are attached) must be running NetBackup 4.5 FP3 or higher.

  If the master server is at NetBackup 4.5 FP3 or higher and one or more media servers are at 4.5, the utility detects the version of all media servers and only performs inventories on hosts that are at the 4.5 FP3 or higher level. If some of the drives are attached to servers that are not at the 4.5 FP3 or higher level, those drives are not used for mounting media.

  If none of the media servers are at the required level, the utility will not be able to perform the inventory operation and an error message is displayed.
- If the master or media server (or SAN media server) for a robot that is being inventoried is at NetBackup 4.5 FP3 or higher, then the volume database host for that robot must also be at 4.5 FP3 or higher.
- The Media Manager Global Device Database must be current before running the physical inventory utility.
- There is no way to distinguish between volume records based on the application type.
- When moving the media from robotic to standalone drives there is no option to move the media to a specific volume group.
- API robot types and optical disk library (ODL) robot types are not supported.

When to Use vmphyinv

This utility can be used to update the Media Manager volume database for NetBackup, Backup Exec, and Storage Migrator media. You can use `vmphyinv` in the following typical cases:

- You inserted new media into the robotic library and there are no Media Manager volume records corresponding to the media. Do one of the following actions.

  It is not recommended to use a robot inventory update action for non-barcoded media unless it is the initial population of the volume database. For non-barcoded media, the second action is the recommended way to inventory the robot.

  a. Add volume records to the Media Manager volume database. This can be done using the Add Volumes or Robot Inventory Update interfaces. After the volume records are added, you can use `vmphyinv` to physically inventory the robot specifying only the robot number.

  or

  b. Use the slot range or list option of `vmphyinv` to perform the inventory operation. You do not need to add volume records to the Media Manager volume database.

- Some of the media are misplaced and the Media Manager volume database does not reflect the correct physical location of these media.

  In these cases, you can inventory the whole robot or choose to inventory a subset of media in the robot with options in `vmphyinv`.

- Media with unknown media IDs or GUIDs are inserted into the robot.

  For example, you insert 10 media from a different tape library in slots 11 to 20 and you do not know the media IDs on the tapes. One method to inventory only these 10 media follows:

  a. Add volume records to the Media Manager volume database for these slots (you can use any media ID in this case).

  b. Move all the media to a separate volume pool, for example, inv_pool

  c. Run `vmphyinv` specifying the pool name as inv_pool. Only the 10 media belonging to this volume pool are inventoried.

  A better way to inventory these 10 media is to specify a slot list/range in `vmphyinv`. When used with a slot list/range option, `vmphyinv` mounts the media using the slot information. When the tape header is read, the media ID can be determined. This media ID is used to add a Media Manager volume record. This method avoids unnecessary proliferation of media IDs like those added in step a.

How vmphyinv Performs a Physical Inventory

For a physical inventory, this utility performs the following sequence of operations:

1. Obtaining a List of Drives Used to Mount the Media
2. Obtaining a List of Media to be Mounted
3. Mounting Media and Reading the Tape Header
4. Updating the Media Manager Volume Database

Obtaining a List of Drives Used to Mount the Media

The drives obtained need not be locally configured. The list of drives is obtained from the global device database. If the device host is specified using the `-h` option, then that device host is used to obtain the global device database. If the `-h` option is not specified, then the current host is used to obtain the database.

You can control the number of drives used by the utility by specifying the `-drv_cnt` *drive_count* option. Though the specific drives to be used for physical inventory cannot be identified, the maximum number of drives that can be used for physical inventory can be specified. This allows you to reserve drives for NetBackup back up or restore operations.

Obtaining a List of Media to be Mounted

`vmphyinv` allows the following choices for specifying the media to be mounted:

- Specify a Media Manager robot number

  Media Manager volume records must be present when using `vmphyinv` with this option. For example, if `vmphyinv` is called with `-rn` *robot_number*, there must be Media Manager records corresponding to the robot number in the Media Manager volume database for the robot. `vmphyinv` obtains a list of Media Manager volume records belonging to that robot and inventories each of the media in the list.

- Specify a Media Manager robot number with filtering options

  Inventorying all the media in the robot may not be desired. You can specify a subset of all the media in the robot using filtering options like volume pool, volume group, or slot range. Media Manager volume records must be present when using `vmphyinv` with these options. The following are some examples:

Options Specified	Media Inventoried
-rn 4 -pn bear	Only media corresponding to robot 4 and in the volume pool bear.

Options Specified	Media Inventoried
-rn 2 -v moon	Media corresponding to robot 2 and in the volume group moon.
-rn 1 -rc1 2 -number 3	Only media corresponding to robot 1 and slot range 2 to 4.
-rn 5 -pn NetBackup -v mars -rc1 2 -number 6	Only media corresponding to robot 5, slot range 2 to 7, and also in volume group mars and the NetBackup volume pool.

- Specify a Media Manager robot number and a list of media belonging to a specific robot. Media Manager volume records must be present in the Media Manager volume database when specifying this option.

  For example, if the `-rn` *robot_number* and `-ml A00001:A00002:A00003` options are specified, only the three media specified are inventoried. But if any of these media do not belong to the specified robot, the media is skipped and is not inventoried.

- Specify a Media Manager robot number and a slot range or list.

  Sometimes, media from a different robot or some other different source is moved to a robot and the media ID on the tape is unknown. In these cases, you can specify a slot range and/or list option. With these options, the Media Manager volume record does not need to be present in the volume database, but you must specify the density (using the `-d` option) when using these options.

Note For a robot that supports multi-media, you should carefully specify the density. If the wrong density is specified, `vmphyinv` cannot complete the mount and a wrong density can affect the physical drive (permanent hardware failure may occur).

The following table shows some examples:

Options Specified	Media Inventoried
-rn 1 -slot_range 2 10 -d dlt	Only media in the slot range 2 to 10 in robot 1.
-rn 0 -slot_list 3:4:5 -d 8mm	Only media in slots 3, 4, and 5 in robot 0.
-rn 2 -slot_range 2 4 -slot_list 5:6:7 -d dlt	Only media in slots 2, 3, 4, 5, 6, and 7 in robot 2.

Mounting Media and Reading the Tape Header

The following sequence of operations explains the mount process that is used:

1. `vmphyinv` contacts the Media Manager volume daemon or process, `vmd`, on the local host or remote host depending on where the drive is attached.

2. `vmd` starts `oprd`.

3. `vmphyinv` communicates with `oprd` and sends the mount request to `oprd`. After receiving the request, `oprd` issues a mount request to `ltid`.

Note The default mount timeout is 15 minutes, but it can be changed by specifying a different mount time in seconds using the `-mount_timeout` option.

Handling Media That is not Recognized

`vmphyinv` reads the tape header to determine the recorded media ID or GUID.

If the media is *not* NetBackup media, Backup Exec media, or Storage Migrator media, the media is unmounted and the next media is mounted. In these cases, `vmphyinv` will not generate a new record in the volume database. If you want to generate volume records for the media, you should run `vmupdate` to update the Media Manager volume database.

Handling Cleaning Media

If the following cases are *all* true, `vmphyinv` will not attempt to mount the media. The cleaning media is skipped and the next media in the list will be mounted.

- `vmphyinv` is *not* used with the slot range or list options.
- There is cleaning media in the robot.
- The media type is specified as cleaning media in the volume record (for example, 4mm_clean or dlt_clean).

If there is cleaning media in the robot and *any* of the following cases are true, then the utility will try to determine if the media is cleaning media.

- `vmphyinv` is used with the slot range or list options, and the media type of the corresponding volume record that is found is not a cleaning media type.
- `vmphyinv` is used with the slot range or list options, and there is no volume record in the Media Manager volume database corresponding to the cleaning media.
- `vmphyinv` is *not* used with the slot range or list options, and the media type of the corresponding volume record that is found is not a cleaning media type.

`vmphyinv` tries to determine if the media is cleaning media based on the SCSI parameters (sense keys, tape alert flags, and physical (SCSI) media types) returned by the robot. If `vmphyinv` cannot determine if the media is cleaning media, it will continuously try to mount the media until the mount request times out.

Note It may not be possible for Media Manager to detect the presence of cleaning media for all drive types. Some drives do not report the presence of cleaning media in a manner usable by Media Manager.

Updating the Media Manager Volume Database

After all the media are mounted and the tape header is read, a list of recommended changes is generated and displayed. You can accept or reject the suggested changes. If you accept the changes, the changes are applied and the Media Manager volume database is updated. Until then the volume database remains unchanged.

Using the Verbose Option

You can specify the `-verbose` option to display summary information for the suggested changes. For example, how many drives are available, the contents of each tape, if the media is a catalog tape, and so on. (The media format column of the summary contains *NetBackup database* for NetBackup catalog tapes.)

This media format summary is written to `stderr`. You can redirect `stderr` to a file to obtain the media format summary.

Update Principles

`vmphyinv` updates databases depending on the media type found and based on the following principles:

- This utility never changes the volume pool, media type, and ADAMM_GUID of an assigned record.
- This utility conditionally changes the media type of an unassigned volume record. The media type is changed only if the new media type belongs to the same family of media types as the old media type. For example, the media type DLT can only be changed to DLT2 or DLT3.
- This utility never unassigns an assigned Media Manager record.
- This utility changes the residence and description field of any Media Manager record if required, regardless of whether it is assigned or not. The description field is changed only if the media is Backup Exec or Storage Migrator media.

Updating When the Media is Determined to be NetBackup Media

`vmphyinv` searches the Media Manager volume database checking if the media ID from the tape is present in the media ID field of any record of the Media Manager volume database.

Media ID Present?	Action
Yes	`vmphyinv` updates the Media Manager volume record having the media ID accordingly.
No	`vmphyinv` creates a new Media Manager volume record corresponding to the NetBackup media.

Updating When the Media is Determined to be Backup Exec Media

`vmphyinv` searches the Media Manager volume database checking if the media GUID from the tape is present in the ADAMM_GUID field of any record of the Media Manager volume database.

Media GUID Present?	Action
Yes	`vmphyinv` updates the Media Manager record having the GUID accordingly.
No	`vmphyinv` creates a new Media Manager record corresponding to the Backup Exec media and updates the volume record. `vmphyinv` may use an existing record if the record does not correspond to any media in the tape library.

Note The NetBackup media database is updated only for Backup Exec media.

For each Media Manager volume record (updated or added), `vmphyinv` does the following operations:

- In the Media Manager record, the ADAMM_GUID field is updated with the GUID and the Description field is updated with the Backup Exec cartridge label read off the tape header.
- The media ID of the Media Manager record (added or updated) is added to the NetBackup media database (if not already present). Each record is assigned to NetBackup (if not already assigned) and its state is set to FROZEN in the NetBackup media database. (Each NetBackup master or media server has a media database that is distinctly separate from the Media Manager volume database.)

The volume pool of the unassigned Media Manager volume records associated with Backup Exec media is changed to the BackupExec pool. If the BackupExec pool is not present, it is created.

Note If a `MEDIA_ID_PREFIX` entry is not specified in the Media Manager configuration file (`vm.conf`), BE is the default prefix used for Backup Exec media.

Updating When the Media is Determined to be Storage Migrator for Windows Media

`vmphyinv` searches the Media Manager volume database checking if the media GUID from the tape is present in the ADAMM_GUID field of any record of the volume database.

Media GUID Present?	Action
Yes	`vmphyinv` updates the Media Manager record having the GUID accordingly.
No	`vmphyinv` creates a new Media Manager record corresponding to the Storage Migrator for Windows media and updates the volume record. `vmphyinv` may use an existing record if the record does not correspond to any media in the tape library.

For each Media Manager volume record (added or updated), `vmphyinv` does the following:

- In the Media Manager record, the ADAMM_GUID field is updated with the GUID and the Description field is updated with the Storage Migrator cartridge label read off the tape header.
- The volume pool of the unassigned Media Manager records associated with Storage Migrator for Windows media is changed to the StorageMigrator pool. If the StorageMigrator pool is not present, it is created.

Note If a `MEDIA_ID_PREFIX` entry is not specified in the Media Manager configuration file (`vm.conf`), RS is the default prefix used for Storage Migrator for Windows media.

The Storage Migrator database is not updated.

Handling Error Cases

`vmphyinv` may not be able to update the Media Manager volume database correctly in the following cases and these cases are reported as errors. If any of the following cases are encountered, manual intervention is required to proceed.

- Duplicate media IDs are found. Two or more media in the same robot have the same media ID.
- A Media Manager volume record belonging to a different robot is found, with the same media ID as the media ID read from the tape header.
- The media type, media GUID, or volume pool of an assigned volume record needs to be changed.
- The barcode of an existing volume record needs to be changed.

Making Changes to Your Hardware Configuration

The following are advanced topics for changing an existing NetBackup configuration:

- "Replacing Devices in a SSO Configuration" on page 357.
- "Decommissioning a Media Server" on page 358.

Replacing Devices in a SSO Configuration

This is a NetBackup Enterprise Server topic.

If you replace an existing device in your shared drive configuration with a new device, the serial number of the device will likely change. This change can lead to a wrong configuration in Media Manager of the global device database and also the local device databases on each server.

▼ To reconfigure the Media Manager device databases after replacing a device

Note The `tpautoconf` options used in this procedure are available only with NetBackup release 5.0 or later.
Media servers that are also robot control hosts, must be running NetBackup release 5.0 or later to use this procedure.

1. Configure the new device on all servers sharing the device. The device must be available through the operating system of each server.

   This device configuration may require remapping, rediscovery, and possibly a reboot of the operating system (refer to the *NetBackup Media Manager Device Configuration Guide* for more information).

2. On a server running NetBackup release 5.0 or later, run `tpautoconf -report_disc` on one of the reconfigured servers to produce a list of new and missing hardware. This command will scan for new hardware, and produce a report showing the new and the replaced hardware.

3. Ensure that all servers that are sharing the new hardware are up and are running NetBackup services.

4. On a server running NetBackup release 5.0 or later, run `tpautoconf` with the `-replace_drive` *drive_name* or `-replace_robot` *robot_number* option. Also specify the `-path` *hardware_path* option. *hardware_path* is the new hardware path, as shown in the output of the report created in step 2.

   The serial number is read from the new hardware device and the Media Manager global data base is updated. Also any servers (running NetBackup release 5.0 or later) sharing the new device will replace the serial number in their local databases.

5. If the new device is a drive, run the device configuration wizard on all servers that are sharing the drive.

   If the new device is a robot, run the wizard on the server that is the robot control host and on all servers that are running any version of NetBackup 4.5.

Decommissioning a Media Server

This is a NetBackup Enterprise Server topic.

Several steps must be accomplished to decommission a media server and remove it from a NetBackup configuration. If all of the steps are not completed, any later restores will have to be performed by importing the tapes, which is a much longer process.

Note If you are using NetBackup Vault and plan to decomission a media server, it is recommended that you contact VERITAS Consulting for help with this task.

▼ To decommission a media server

In the following procedure the media server that is being decommissioned is referred to as the *old_server* and the new media server as *new_server*.

Refer to the NetBackup system administrator's guide for more information for the steps involving configuring NetBackup.

1. Run the `bpmedialist` command to determine which tapes on the *old_server* have NetBackup images that have not expired (the `-l` option produces one line of output per tape).

   ```
   bpmedialist -mlist -l -h old_server
   ```

2. Select another server or the master server (*new_server*) to manage the tapes from the *old_server*.

   Run the `bpmedia` command for each tape that has active images as identified in step 1. This updates the NetBackup media database files on the *old_server* and the *new_server*, and updates the images database on the master server. (Media database files are binary files that can only be updated by `bpmedialist`.)

   ```
   bpmedia -movedb -ev media_ID -oldserver old_server
           -newserver new_server
   ```

3. Add the following command to the end of the `bp.conf` file on the master server to allow restores to occur from a media server other than the server that performed the original backups. *old_server* is the media server that performed the original backups and *new_server* is the server that will be used for future NetBackup restores (see step 2).

   ```
   FORCE_RESTORE_MEDIA_SERVER = old_server new_server
   ```

4. Use the Media and Device Management GUI to move the tapes that are in robots attached to the *old_server* to non-robotic status (standalone). Select each robot attached to the *old_server*, highlight all of the tapes, and move them to standalone.

   See "Moving Volumes" on page 141.

5. Use the Media and Device Management GUI to delete the drives and then the robots from the *old_server*.

   See "Managing Your Device Configuration" on page 69.

6. Use the Storage Unit Management GUI to delete all storage units associated with robots that are associated with the *old_server*.

7. If any robots from the *old_server* will be reused on other media servers, do the following steps:

   a. Power down the affected servers and make any cabling changes required to physically attach the robots to the new media servers. Verify that the robots are recognized by the operating system on the new media servers.

   b. Use the Media and Device Management GUI to add the robots and drives to those media servers.

See "Adding Robots" on page 47 and "Adding Drives" on page 61.

c. Use the Storage Unit Management GUI to create the appropriate NetBackup storage units.

d. Use the Media and Device Management GUI to inventory the robots attached to the *new_server*. This will update the location of all tapes in these robots.

8. Modify any classes that explicitly specified any of the storage units on the *old_server*. These classes must be changed to point to any other defined storage units in the NetBackup configuration or to `Any Available`, as appropriate.

9. Update the `bp.conf` and `vm.conf` files (or their equivalent on Windows servers) on the master server and all media servers in the NetBackup configuration to remove any reference to the *old_server*.

10. Update the server list on all clients to no longer refer to the *old_server*. Restart the NetBackup daemons (or services) on any system where these files are modified.

Labeling Media

You normally do not have to label media.

For a robotic library, you select the media IDs when you configure the media in Media Manager and tape labeling is done automatically when NetBackup uses the media. For optical media, you have the option of formatting and labeling when you add the media to the robot. Or, you can do it manually with the Media Manager `tpformat` command.

For standalone drives, the standalone drive extension feature makes it unnecessary to label media in a standalone drive You can, however, pre-label tapes by using the `bplabel` command.

Automatic labeling does not occur if the media was last used for NetBackup catalog backups. It also does not occur if the media contains data from a recognized non-NetBackup application and you are not using the NetBackup Media host property, **Allow Media Overwrite**. In either of these instances, you must label the media by using the `bplabel` command.

Pre-labeling of Media

It may be beneficial to pre-label your media for the following reasons:

- Writing a label validates that the media is usable, compatible, and is not write-protected.

- The recorded label may assist with media management in the cases where the media is misplaced, or the barcode or external label is missing or damaged.

Mounting and Unmounting of Media

For robots, Media Manager automatically mounts and unmounts the volume. Operator intervention is usually required only if the required volume is not in the robot.

For example, if a restore requires a volume that has been removed from a robot (or is offsite), the Device Monitor will display a mount request. The operator can then locate and insert the proper volume and resubmit the request using the Device Monitor.

Suspending Media Or Downing Devices

NetBackup can automatically suspend the use of volumes, or down a device if it suspects failures are due to the volume or the device. The reason for the action is logged in the NetBackup error catalog (viewable in the Media Logs report or the All Log Entries report). If Media Manager downs a device it is logged in the system log.

Repeated write failures are usually the cause for setting a volume to the SUSPENDED state or a device to DOWN. A volume is also set to SUSPENDED if the write failure occurs in such a way that could make future attempts at positioning unreliable. Write failures are frequently caused by a tape device with dirty write heads or deteriorating media.

▼ **To reverse a suspend or down action**

1. Use the `bpmedia` command to unsuspend the volume.
2. Use the NetBackup Device Monitor to set the device to Up.

How Media Manager Selects a Drive for a Robotic Mount Request

When a robotic mount request is issued, `ltid` queries `vmd` on the volume database host(s) for the media ID that was specified. If the media ID is found, `vmd` returns the location of the media (which robotic library and the storage slot number, if applicable).

If a drive exists that meets the following criteria, the mount request is forwarded to the appropriate robotic daemon.

- The drive is configured.
- The drive is in the robotic library that contains the media.

- The drive allows the requested media density.

A robotic daemon manages the drives and requests for locally-attached or shared drives in the robotic library that contains the requested media. The daemon (for example, `tldd`) does the following:

1. Determines which of the drives are currently available. Is the drive
   - Configured as DOWN?
   - Already assigned?
   - Of a compatible type?
   - *The following applies only to NetBackup Enterprise Server.*

     Reserved by another host?
2. Picks the drive that was used least recently.

The time stamp used by drive selection is contained in robotic daemon memory. This stamp is based on the dismount time, *not* the mount time. The first drive in the drive configuration as shown by `tpconfig -d` will be used first, then the second drive, and so on. If the daemon is stopped and restarted, the drive stamps are all reset.

The following point applies only to NetBackup Enterprise Server.

When selecting drives among a set of drives, and some of the drives are shared (SSO option) and some are not, a non-shared drive is chosen first (if one is available). This is so the shared drives can be used on other hosts that are sharing the drives.

How NetBackup Selects Media in Robots

When NetBackup selects a volume in a robot, it proceeds as follows:

1. NetBackup searches the media catalog for a volume that is already mounted in a drive and which meets the following criteria:
   - Configured to contain backups at the retention level required by the schedule (unless the NetBackup Media host property, **Allow Multiple Retentions per Media** is specified for the server).
   - In the volume pool required by the backup that is being performed.
   - Not in a FULL, FROZEN, IMPORTED, or SUSPENDED state.
   - Of the same density required by the requested backup and, in the case of a robotic storage unit, in the robot requested by the backup.
   - Not currently in use by another backup or a restore.

- Not written in a protected format. This is detected after the volume is mounted. If the volume is in a protected format, it is unmounted and NetBackup resumes the search.

2. If NetBackup cannot find a mounted volume that satisfies all of the conditions in step 1, it checks its media catalog for any volume that is suitable.

3. If the media catalog does not have a suitable volume, NetBackup requests Media Manager to assign one. Also, if a volume is at EOM (end of media), NetBackup will request a new volume. This may happen even if the volume if not completely full (because NetBackup received an EOM message from the drive).

   Media Manager assigns a volume to NetBackup that meets all of the following criteria:

   - Is the correct media type.
   - Is for the correct robot type (if applicable).
   - Is located in the requested robotic peripheral (if applicable).
   - Resides on the requested host.
   - Is in the correct volume pool.
   - Is not currently assigned (not already allocated to NetBackup).
   - Is not expired (if an expiration date is defined in Media Manager).
   - Has not exceeded the maximum number of mounts allowed.

4. If more than one volume qualifies, Media Manager chooses the volume that was least recently used. NetBackup then adds it to the media catalog and assigns it the specified retention level.

5. If there are no unassigned volumes of the requested type, the backup terminates with an error indicating that there was no available media.

Spanning Media

After an end of media (EOM) condition is reached, automatic media selection is a special case and depends on whether NetBackup is configured to allow backups to span media, as follows:

- NetBackup spans media if the NetBackup Media host property **Allow Backups to Span Media** is specified for the server. In this case, NetBackup uses another volume to start the next fragment and the resulting backup is composed of fragments on different volumes.

- NetBackup does *not* span media if **Allow Backups to Span Media** is not specified. In this case, the backup terminates abnormally and the operation is retried according to the NetBackup Global Attributes host property, **Schedule Backup Attempts**.

How NetBackup Selects Media in Standalone Drives

The section explains media selection and other aspects of standalone drive operations.

Media Selection Using Standalone Drive Extensions

When the standalone drive extensions capability is enabled, NetBackup tries to use any labeled or unlabeled media that is in a standalone drive. This capability is enabled by default during installation. The media selection process is as follows:

1. If a backup is requested and an appropriate standalone drive does not contain a volume, NetBackup selects a volume as explained in "How NetBackup Selects Media in Robots" on page 362.

   The Device Monitor shows the mount request; and an operator must manually insert the volume and assign it to a drive.

2. If an appropriate drive contains a volume, NetBackup tries to select and use that volume.

A volume that has been previously used for backups must meet the following criteria:

- Not be FULL, FROZEN, or SUSPENDED.
- Be at the same retention level and in the same volume pool as the backup being performed, unless you specify the NetBackup property **Allow Multiple Retentions per Media** for the server.

Previously unused media is used by NetBackup. If the media is unlabeled, the following actions occur:

1. NetBackup labels the media.

2. Media Manager adds a media ID to the volume configuration, if necessary. If a media ID is added, the NetBackup media ID prefix is used as the first characters of the media ID.

3. If a media ID prefix is not specified, the default prefix is the letter A. For example, A00000.

4. Media Manager adds the requested volume pool to the volume configuration (if the backup policy specifies a volume pool).

If the unused media is unlabeled, you can label it by using the `bplabel` command. When using this command, you can specify the `-u` parameter in order to force assignment of a specific drive index. This eliminates the need to manually assign the drive.

Disabling Standalone Drive Extensions

You can disable the standalone drive extensions by clearing the NetBackup Media host property check box, **Enable Standalone Drive Extensions,** for the server. Clearing this property causes NetBackup to use the same method to select media for standalone drives as it uses for robotic drives.

Spanning Media

Media selection following an end of media condition is a special case and depends on whether NetBackup is configured to allow backups to span media, as follows:

- NetBackup spans media if the Media host property, **Allow Backups to Span Media,** is specified for the server. In this case, NetBackup selects another volume to begin the next fragment and the resulting backup has data fragments on more than one volume.

  a. Following an end of media condition, NetBackup first attempts to use an unassigned volume rather than one that already has images on it, and requests Media Manager to assign one. Media Manager checks its volume database for a volume that is the correct media type, in the correct volume pool, and so on.

  b. If Media Manager cannot find a suitable volume, NetBackup selects one from its media catalog.

  c. In either case, the Device Monitor displays the mount request and an operator must manually insert the volume and assign it to the drive.

- NetBackup does not span media if **Allow Backups to Span Media** is not specified. In this case, the backup terminates abnormally when the end of media is reached and the operation is rescheduled according to the Global Attributes host property, **Schedule Backup Attempts**.

When spanning media and an end of media is encountered on a standalone drive that uses a gravity feed stacker (a stacker that is not controlled by software), you can direct NetBackup to continue on the next volume loaded by the stacker, rather than looking for another drive.

To do this, specify the Media host property, **Media Request Delay,** for the server. This property specifies the number of seconds for NetBackup to pause before looking for another drive. When using a standalone drive without a stacker, **Media Request Delay** can be set to allow enough time for the operator to insert the desired volume.

Keeping Standalone Drives in the Ready State

To leave standalone drives in a ready condition after a backup or restore completes, use the DO_NOT_EJECT_STANDALONE entry in the `vm.conf` file. See "The Media Manager Configuration File (vm.conf)" on page 379.

When NetBackup detects this entry, it prevents Media Manager from ejecting the tape after an operation completes. The tape is ejected if end of media (EOM) is reached.

It is possible for more than one standalone drive to be ready and contain suitable media. If this occurs, the drive selection occurs in logical drive index number order. For example, if drives 2 and 3 are the same type and both contain suitable media, NetBackup selects drive 2.

Media Formats

NetBackup writes media in a format that allows the position to be verified before appending new backups. The format for tape and optical media differ slightly due to characteristics of the media itself.

To determine the contents of tape or optical media, use the Media Contents report. For optical media, the offsets and sizes are shown, along with the backup ID. For tape media, the file number is shown.

The following symbols are used in the media format descriptions that follow.

Symbol	Description
MH	Media Header (1024 bytes).
*	Tape mark.
BH	Backup Header (1024 bytes).
BH1 ... BHn	Backup Headers (1024 bytes). One for each job that is part of the set of jobs being multiplexed
Image	Data from the backup.

Symbol	Description
EH	Empty Backup Header, used for position validation.

Non-QIC Tape Format

For all tape media except QIC, the format for backups that are not multiplexed is as follows:

MH * BH Image * BH Image * BH Image * EH *

When adding a new backup image, the tape is positioned to the EH and the position is verified. The EH is overwritten by a BH and the backup proceeds. When complete, a new EH is written for future positioning validation.

When NetBackup encounters the end of media during a write, it terminates the tape with two tape marks and does not write an EH.

QIC Tape Format

For QIC tape media, NetBackup does not write empty backup headers (EH). The format of nonmultiplexed backups is as follows:

MH * BH Image * BH Image * BH Image . . .

To append backup images to QIC media, NetBackup positions to the end of data (EOD) and then starts the next backup.

Optical Media Format

For optical media, the format is as follows:

MH BH Image EH BH Image EH BH Image EH

Note Optical disk media have no tape marks to delimit backups. The data on an optical disk is recorded in successive sectors. Since optical disks can seek to a random position, finding and verifying a position is a fast operation.

Fragmented Backups

For fragmented backups the media format is similar to the format described for QIC and non-QIC tapes, except that NetBackup breaks the backup image into fragments of the size that you specify when you configure the storage unit.

For example,

MH * BH Image (frag 1)* BH Image (frag 2)* BH Image (frag n) * EH *

Fragmentation is intended primarily for storing large backup images on a disk type storage unit. In these instances, fragmenting images allows you to avoid exceeding the two gigabyte size limit that applies to most UNIX file systems.

Another benefit of fragmenting backups on disk is increased performance when restoring from images that were migrated by Storage Migrator. For example, if a 500 megabyte backup is stored in 100 megabyte fragments, you can restore a file quicker because Storage Migrator has to retrieve only the specific fragment with the file rather than the entire 500 megabytes.

Fragmenting tape backups can also speed up restores because NetBackup can skip to the specific fragment before starting its search for a file.

Note If an error occurs in a backup, the entire backup is discarded and the backup restarts from the beginning, not from the fragment where the error occurred.

Multiplexing Format

The tape format for multiplexed backups is as follows. By default, the data image is in 64 kilobyte blocks. Each block also contains 512 bytes that are reserved for multiplexing control information and to identify the backup that the block corresponds to.

MH * BH1 ... BHn Image...

When a job ends or a new job is added to the multiplexing set, NetBackup writes a tape mark and starts multiplexing the revised set of jobs. The following is an example of this.

MH * BH1 BH2 BH3 Image* BH2 BH3 Image* BH2 BH3 BH4 Image. .

Spanning Tapes

By default, NetBackup spans a backup image to another tape if it encounters the end of media during a backup. The format is the same as described for fragmented backups, and the first fragment on the next tape begins with the buffer of data where the end of media occurred.

First tape: (NetBackup does not write an EH, and terminates the tape with two tape marks)

MH * ... *BHn Image (frag 1) * *

Second tape:

MH * BHn Image (frag2)* ... * EH *

Media Manager Security

Media Manager security works in conjunction with NetBackup authentication / authorization security (see "NetBackup Authentication / Authorization" on page 369) to control user access to the following:

- `vmd` (the Media Manager volume daemon on UNIX and the NetBackup Volume Manager service on Windows).
- Media Manager robotic daemons and services.

Media Manager security consists of the following levels of security. Each successive level listed provides more security. These levels are explained in the following topics:

- "Media Manager Authentication / Authorization" on page 370.
- "Media Manager Security (Using SERVER Configuration Entries)" on page 371.
- "Possible NetBackup and Media Manager Conflicts" on page 372.
- "Media Manager Enhanced Authorization" on page 372.

NetBackup Authentication/Authorization

NetBackup authentication verifies NetBackup client to server access and also controls access to the services available on that host.

NetBackup authorization verifies if a NetBackup administration user has permission to use the services available on that host. Authorization provides additional security over the security provided by authentication.

The steps you use to set up security levels for your NetBackup master server apply generally to setting up security for Media Manager media servers (or SAN media servers). See the NetBackup system administrator's guide (for UNIX or for Windows servers) for more information including the following topics:

- Explanations of authentication and authorization.
- Explanations of Enhanced Authentication.
- Explanations of Enhanced Authorization.
- Definition of the NetBackup configuration file (`bp.conf`) on UNIX.
- Definitions of the `methods.txt`, `methods_allow.txt`, and `authorize.txt` files.
- Information on `bpauthsync(1M)`, `vopied(1M)`, and `vopie_util(1M)` man pages.

Media Manager Authentication/Authorization

Media Manager security works in conjunction with the following security components to control access to vmd and robotic functions.

- NetBackup authentication / authorization
- Media Manager server-based security
- Media Manager enhanced authorization (incudes robot authorization)

The two matrices (“No vm.conf Entry Present” on page 370 and “vm.conf Entry is Present” on page 371) provide an overview of Media Manager security. Server Name, used in these matrices, refers to SERVER entries in the Media Manager configuration file.

See “The Media Manager Configuration File (vm.conf)” on page 379 for more information about the SERVER, AUTHORIZATION_REQUIRED, ENABLE_ROBOT_AUTH, and PREFERRED_GROUP entries.

No vm.conf Entry Present

The following matrix describes Media Manager security when there is *no* AUTHORIZATION_REQUIRED entry in the vm.conf file.

If authentication is not enabled (see the fourth row in the following matrix), the resulting security reduces to the level of Media Manager server-based security (see “Media Manager Security (Using SERVER Configuration Entries)” on page 371).

Media Manager Security Matrix - No AUTHORIZATION_REQUIRED Entry

Access to Media Manager functionality?	Server name is in vm.conf	No server names in vm.conf (or no vm.conf file)	Server name not in vm.conf (other server names are present)
Authentication failed	Denied	Denied	Denied
Authentication enabled and user is authorized	Allowed	Allowed	Allowed (overrides server-based security)
Authentication enabled and user is not authorized	Allowed (uses server-based security)	Allowed (uses server-based security)	Denied
Authentication not enabled	Allowed	Allowed	Denied

vm.conf Entry is Present

The following matrix describes Media Manager security when there *is* an `AUTHORIZATION_REQUIRED` entry in the `vm.conf` file.

Media Manager Security Matrix - AUTHORIZATION_REQUIRED Entry

Access to Media Manager functionality?	Server name is in vm.conf	No server names in vm.conf	Server name not in vm.conf (other server names are present)
Authentication failed	Denied	Denied	Denied
Authentication enabled and user is authorized	Allowed	Allowed	Allowed (overrides server-based security)
Authentication enabled and user is not authorized	Allowed (uses server-based security)	Denied (disables server-based security)	Denied
Authentication not enabled	Allowed	Denied	Denied

Your level of security is dependent upon your use of the following:

- Authentication
- Authorization
- `SERVER` entries in `vm.conf`

Media Manager Security (Using SERVER Configuration Entries)

`SERVER` entries in `vm.conf` are used for server-based Media Manager security.

If there are no `SERVER` entries and no `AUTHORIZATION_REQUIRED` entry present on a particular host, other hosts can perform media and device management on the host. You can add `SERVER` entries allowing only specific hosts to remotely access those capabilities.

The fourth row of the matrix in "No vm.conf Entry Present" on page 370 provides an overview of Media Manager server-based security level.

If a host's `vm.conf` file contains *any* `SERVER` entries, there must also be a `SERVER` entry for that host or it will not be able to manage its own devices.

Possible NetBackup and Media Manager Conflicts

Media Manager authentication / authorization may affect systems where NetBackup authentication / authorization has been enabled.

Connections to media and device management functionality on the host will fail if the following are all true:

- Authentication / authorization are enabled.
- An `AUTHORIZATION_REQUIRED` entry is present in `vm.conf`.
- The caller of the media and device management functions does not have the required permission to use those functions.

▼ **To enable authentication/authorization in NetBackup (but not in Media Manager)**

You can do either of the following:

❖ Add `SERVER` entries in `vm.conf`.

❖ Have no `SERVER` and no `AUTHORIZATION_REQUIRED` entries in `vm.conf`.

Media Manager Enhanced Authorization

The set of commands that Media Manager enhanced authorization allows users (other than administrators) to execute is limited. These commands interact with `vmd` or with the control functions for robotic services.

See the following topics:

- "Supported Commands and Daemons" on page 373.
- "Allowing Enhanced Authorization" on page 374.
- "Enabling Robot Authorization" on page 374.

Supported Commands and Daemons

The set of Media Manager commands and daemons (or services) that support enhanced authorization are shown in the following table. All other Media Manager commands that manipulate the Media Manager database or configuration files directly are restricted to administrators. Review the Note column for any restrictions.

Commands and Daemons (or Services)	Note	Commands and Daemons (or Services)	Note
acsd	Applies only to NetBackup Enterprise Server.	tshd	
lmfcd	Applies only to NetBackup Enterprise Server.	vmadd	
odld		vmchange	
rsmd		vmcheckxxx	
tl4d		vmdelete	
tl8cd		vmoprcmd	
tldcd		vmphyinv	
tlhcd	Applies only to NetBackup Enterprise Server.	vmpool	
tlmd	Applies only to NetBackup Enterprise Server.	vmquery	
tpautoconf		vmrule	
ts8d		vmupdate	
tsdd			

Allowing Enhanced Authorization

If you want to allow nonroot users to administer Media Manager or control user access to administer Media Manager commands, use either of the following methods:

- See the NetBackup system administrator's guide for UNIX for instructions on using the `nonroot_admin` script.

  This script can be used to change permissions for these commands. In this case, nonroot authorized users may be able to run some of these commands. However, this use of the script is currently not supported. In particular for those commands that use the Media Manager databases, execution by nonroot users will fail since access to the databases is restricted.

- See the NetBackup system administrator's guide for UNIX for instructions on using enhanced authentication and authorization.

Enabling Robot Authorization

Robot authorization extends the scope of Media Manager enhanced authorization to include the robot daemons (or services). The robot daemons (and services) authenticate and authorize incoming requests so that a subset of robot functions can be used by authorized users. By default robot authorization is disabled.

Since the use of reserved ports is only valid for privileged users, the Media Manager robot daemons (and services) no longer require reserved ports.

Note Connecting to a robotic control daemon using a reserved port is still allowed.

▼ **To enable robot authorization**

- Add an `ENABLE_ROBOT_AUTH` entry in `vm.conf` on the master server and the media server (or SAN media server).

Administrators Quick Reference

The tables (see "Media Manager Commands" on page 375 and "Media Manager Log Files" on page 378) provide a quick reference to commands and log files that you may require while using Media Manager. Check the Note column for any restrictions.

Media Manager Commands

See the NetBackup Commands for UNIX reference guide for detailed information on most of the commands shown in the following tables.

The `jnbSA` command is located in the directory `/usr/openv/netbackup/bin`. The other commands listed are located in `/usr/openv/volmgr/bin`.

Administrative Utilities

Command	Description
`jnbSA`	Starts the Java media and device management, and device monitor administrative interfaces.
`vmadm`	Starts the character-based, menu-driven media management utility.
`tpconfig`	Starts the character-based, menu-driven utility for device configuration.
`robtest`	Starts the robotic test utilities. NOTE: This utility is not officially supported.

Starting Daemons

Command	Description	Note
`acsd`	The Automated Cartridge System robotic daemon. This daemon is started by `ltid`.	Applies only to NetBackup Enterprise Server.
`avrd`	The Automatic Volume Recognition daemon. This daemon is started by `ltid`.	
`lmfcd`	Starts the Library Management Facility robotic-control daemon. This daemon is started by `ltid`.	Applies only to NetBackup Enterprise Server.
`lmfd`	The Library Management Facility robotic daemon. This daemon is started by `ltid`.	Applies only to NetBackup Enterprise Server.
`ltid`	Starts the Media Manager device daemon. Starting `ltid` also starts the robotic, robotic control, and Media Manager volume and `avrd` daemons.	

Starting Daemons (continued)

Command	Description	Note
odld	The Optical Disk Library robotic daemon. This daemon is started by ltid.	
tl4d	The Tape Library 4MM robotic daemon. This daemon is started by ltid.	
tl8cd	Starts the Tape Library 8MM robotic-control daemon. This daemon is started by ltid.	
tl8d	The Tape Library 8MM robotic daemon. This daemon is started by ltid.	
tldcd	Starts the Tape Library DLT robotic-control daemon. This daemon is started by ltid.	
tldd	The Tape Library DLT robotic daemon. This daemon is started by ltid.	
tlhcd	Starts the Tape Library Half-inch robotic-control daemon. This daemon is started by ltid.	Applies only to NetBackup Enterprise Server.
tlhd	The Tape Library Half-inch robotic daemon. This daemon is started by ltid.	Applies only to NetBackup Enterprise Server.
tlmd	The Tape Library Multimedia daemon. This daemon is started by ltid.	Applies only to NetBackup Enterprise Server.
ts8d	The Tape Stacker 8MM robotic daemon. This daemon is started by ltid.	
tsdd	The Tape Stacker DLT robotic daemon. This daemon is started by ltid.	
tshd	The Tape Stacker Half-inch robotic daemon. This daemon is started by ltid.	Applies only to NetBackup Enterprise Server.
vmd	The Media Manager volume daemon. This daemon is started by ltid.	

Stopping Daemons

Command	Description	Note
`kill` *pid*	Stops the process for the daemon with the specified *pid* (process id). This is a system command with a path of `/usr/bin/kill` or `/bin/kill`.	
`lmfcd -t`	Stops the Library Management Facility robotic control daemon.	Applies only to NetBackup Enterprise Server.
`stopltid`	Stops the device, robotic, and robotic-control daemons.	
`tldcd -t`	Stops the Tape Library DLT robotic-control daemon.	
`tl8cd -t`	Stops the Tape Library 8MM robotic-control daemon.	
`tlhcd -t`	Stops the Tape Library Half-inch robotic-control daemon.	Applies only to NetBackup Enterprise Server.

Monitoring Processes

Command	Description
`vmps`	Lists the active processes. NOTE: This command is not officially supported.

Media Manager Log Files

The following table contains descriptions of important Media Manager log files.

Log Files

Log File	Description	Note
System Log (syslog)	Contains general Media Manager logging, including errors. All log messages use the daemon facility. For debug logging, use the `-v` option on the command starting the daemon or use VERBOSE in the `vm.conf` file.	
`daemon/log.`*ddmmyy*	Contains debug information for the volume daemon (`vmd`) and its associated processes (`oprd` and `rdevmi`). The path is `/usr/openv/volmgr/debug/daemon`.	
`reqlib/log.`*ddmmyy*	Contains debug information on the processes that request `vmd`. The path is `/usr/openv/volmgr/debug/reqlib`.	
`tpcommand/log.`*ddmmyy*	Contains debug information for device configuration. Includes information for `tpconfig`, `tpautoconf`, and the NetBackup GUIs. The path is `/usr/openv/volmgr/debug/tpcommand`.	
`ltid/log.`*ddmmyy*	Contains debug information for `ltid`, the Media Manager device daemon. The path is `/usr/openv/volmgr/debug/ltid`.	
`acsssi/event.log`	Contains debug and error information for the `acsssi` component of ACS robotic control.	Applies only to NetBackup Enterprise Server.
`robots/log.`*ddmmyy*	Contains debug information for SCSI robotic daemons. Includes information for `tldcd`, `tl8cd`, `tl4d`, `rsmd`, and `tshd` daemons. The path is `/usr/openv/volmgr/debug/robots`.	

The Media Manager Configuration File (vm.conf)

The `/usr/openv/volmgr/vm.conf` file contains configuration entries for media and device management. This file is usually created by NetBackup, but if it does not exist you may need to create it to add entries.

Entries in this configuration file are read and interpreted on the host where the NetBackup component (command, daemon, process, or utility) that is using a specific entry is running. This host may be a NetBackup administration client or a server where administration operations are requested.

See "Example vm.conf File" on page 399 for an example configuration file.

The entries that this file can contain are as follows.

- "ACS Media Mapping" on page 380
- "ACSSEL Listening Socket" on page 381
- "ACSSSI CSI Host Port" on page 381
- "ACSSSI Host Name" on page 382
- "ACSSSI Inet Port" on page 382
- "ACSSSI Listening Socket" on page 383
- "Adjacent LSM Specification for ACS Robots" on page 383
- "API Robot Barcode Rule Enable" on page 384
- "Authorization Required" on page 384
- "Automatically Empty Robot MAP" on page 385
- "AVRD Scan Delay" on page 385
- "AVRD Pending Status Delay" on page 385
- "Cleaning Drives Timeout" on page 386
- "Client Port Range" on page 386
- "Connect to Firewall Options" on page 386
- "DAS Client Name" on page 387
- "Days To Keep Debug Logs" on page 388
- "Device Host Entries" on page 388
- "Disallow Non-NDMP Request on NDMP Drive" on page 388
- "Do Not Eject Standalone Tapes" on page 389
- "Enable Automatic Path Remapping" on page 389

- "Enable Robot Authorization" on page 389
- "Inventory Robot Filter" on page 390
- "LMF Media Mapping" on page 390
- "Media Access Port Default for ACS Robots" on page 391
- "Media ID Generation" on page 391
- "Media ID Prefix" on page 392
- "Not Allowing a Host To Manage Databases" on page 393
- "Preferred Group" on page 393
- "Prevent Media Removal (for TL8 Robots)" on page 393
- "Random Port Numbers" on page 394
- "Cluster Name, Media Manager Name, Required Network Interface" on page 394
- "Return Media to the Scratch Pool" on page 395
- "Scratch Pool Configuration" on page 395
- "Server Entry" on page 396
- "SSO DA Re-register Interval" on page 396
- "SSO DA Retry Time" on page 396
- "SSO Host Name" on page 397
- "SSO Scan Ability Factor" on page 397
- "TLH Media Mapping" on page 398
- "TLM Media Mapping" on page 398
- "Vault Media Description Reset" on page 399
- "Verbose Message Logging" on page 399

ACS Media Mapping

`ACS_mediatype = Media_Manager_mediatype`

This configuration entry applies only to NetBackup Enterprise Server

If this entry is specified in `vm.conf`, ACS (Automated Cartridge System) media types are mapped to Media Manager media types. This entry is read and interpreted on the host where `vmcheckxxx` and `vmupdate` are running as part of the robot inventory operation.

For more information, see the appendix, "STK Automated Cartridge System (ACS)" on page 473.

ACSSEL Listening Socket

`ACS_SEL_SOCKET = socket_name`

This configuration entry applies only to NetBackup Enterprise Server

By default, `acssel` listens on socket name 13740. If this entry is specified in `vm.conf`, you can change the default. This entry is read and interpreted on the host where `acsd` is running.

For more information, see the appendix, "STK Automated Cartridge System (ACS)" on page 473.

ACSSSI CSI Host Port

`ACS_CSI_HOSTPORT = ACS_library_software_host socket_name`

This configuration entry applies only to NetBackup Enterprise Server

This entry specifies the port where the `acsssi` process will send its ACSLS requests on the ACSLS server. The ACSLS CSI must be using this port to accept inbound ACSLS requests from acsssi processes.

This entry (in conjunction with `ACS_SSI_INET_PORT` and `ACS_TCP_RPCSERVICE` entries) is commonly used with firewall implementations. With these three entries added to `vm.conf`, TCP connections use the designated destination ports. Note that TCP source ports are not restricted. Also see "ACSSSI Inet Port" on page 382.

Valid values are 1024 - 65535 and 0. The value specified must match the value set on the ACSLS server for the port used by the CSI for inbound packets.

0 (zero) indicates that the previous behavior of CSI and `acsssi` will be used (no specific ports).

For example, a NetBackup media server has two ACSLS servers (ACSLS_1 and ACSLS_2) behind firewalls. Both servers are listening for queries on port 30031 and the firewall allows traffic through this port. The entries would be as follows:

```
ACS_TCP_RPCSERVICE
ACS_CSI_HOSTPORT = ACSLS_1 30031
ACS_CSI_HOSTPORT = ACSLS_2 30031
ACS_SSI_INET_PORT = ACSLS_1 30032
ACS_SSI_INET_PORT = ACSLS_2 30033
```

This means that each `acsssi` process will send queries to the respective ACSLS server's port 30031 and that the ACSLS server has been configured to listen for queries on this port.

For more information, see the appendix, "STK Automated Cartridge System (ACS)" on page 473.

ACSSSI Host Name

`ACS_SSI_HOSTNAME = host`

This configuration entry applies only to NetBackup Enterprise Server

If this entry is specified in `vm.conf`, you can specify the host where RPC return packets from ACS library software are routed for ACS network communications. By default, the local host name is used. This entry is read and interpreted on the host where `acsd` and `acsssi` are running.

See the appendix, "STK Automated Cartridge System (ACS)" on page 473 for more information.

ACSSSI Inet Port

`ACS_SSI_INET_PORT = ACS_library_software_host socket_name`

This configuration entry applies only to NetBackup Enterprise Server

This entry specifies the port that `acsssi` will use for incoming ACSLS responses. Valid values are 1024 - 65535 and 0. This value must be unique for each `acsssi` process.

This entry (in conjunction with `ACS_CSI_HOSTPORT` and `ACS_TCP_RPCSERVICE` entries) is commonly used with firewall implementations. With these three entries added to `vm.conf`, TCP connections use the designated destination ports. Note that TCP source ports are not restricted. Also see "ACSSSI CSI Host Port" on page 381.

A value between 1024 - 65535 indicates the number to be used as the TCP port on which `acsssi` will accept ACSLS responses.

0 (zero) indicates that the previous behavior of allowing the port to be dynamically allocated should remain in effect.

For example, a NetBackup media server has two ACSLS servers (ACSLS_1 and ACSLS_2) behind firewalls. Ports 30032 and 300033 have been opened in the firewall for `acsssi` to ACSLS server communication. The entries would be as follows:

```
ACS_TCP_RPCSERVICE
ACS_SSI_INET_PORT = ACSLS_1 30032
ACS_SSI_INET_PORT = ACSLS_2 30033
```

```
ACS_CSI_HOSTPORT = ACSLS_1 30031
ACS_CSI_HOSTPORT = ACSLS_2 30031
```

This means that the NetBackup media server will start two `acsssi` processes, one listening for ACSLS_1 responses on port 30032, the other listening on port 30033 for responses from ACSLS_2.

For more information, see the appendix, "STK Automated Cartridge System (ACS)" on page 473.

ACSSSI Listening Socket

`ACS_SSI_SOCKET = ACS_library_software_host socket_name`

This configuration entry applies only to NetBackup Enterprise Server

By default, `acsssi` listens on unique, consecutive socket names starting with 13741. If this entry is specified in `vm.conf`, you can specify socket names on a ACS library software host basis. This entry is read and interpreted on the host where `acsd` and `acsssi` are running.

For more information, see the appendix, "STK Automated Cartridge System (ACS)" on page 473.

Adjacent LSM Specification for ACS Robots

`ADJ_LSM = robot_num ACS_ID,LSM_ID ACS_ID,LSM_ID`

This configuration entry applies only to NetBackup Enterprise Server.

In an ACS robot with multiple Library Storage Modules (LSMs), media to be ejected may have to travel through pass-through mechanisms from LSM to LSM to reach a Media Access Port (MAP). This travel time can be excessive when passing through several LSMs.

Use this entry to specify the physical orientation of the LSMs in an ACS robot. If this entry is specified in `vm.conf`, you do not need to know which MAP (or ACS CAP) to select for efficient ejects. Media Manager determines the appropriate MAP to complete the media eject using a nearest-MAP algorithm.

This nearest-MAP algorithm is based on the physical orientation of the LSMs that you define with this entry. This algorithm is only for the cases where more than one MAP has been requested to handle the eject. If this algorithm is being utilized, any `MAP_ID` entries in `vm.conf` are ignored.

Note The nearest-MAP capability is only available using the `vmchange` command with the `-map` option or the Vault administrative interface. It is not available in the NetBackup graphical administrative interfaces for Media Manager.

Without this entry present, Media Manager assumes that all LSMs are interconnected with pass-through ports, except for the first and last LSMs (the LSMs are interconnected in a line formation).

robot_num is the robot number. *`ACS_ID`* and *`LSM_ID`* are the coordinates of the LSM.

The following example specifies the physical layout of LSM interconnections for robot number 700. This robot has 4 LSMs that are connected by pass-through mechanisms in a circular configuration. LSMs 1 and 3 are also interconnected.

```
ADJ_LSM = 700 0,0 0,1
ADJ_LSM = 700 0,0 0,3
ADJ_LSM = 700 0,1 0,3
ADJ_LSM = 700 0,1 0,2
ADJ_LSM = 700 0,2 0,3
```

API Robot Barcode Rule Enable

`API_BARCODE_RULES`

This configuration entry applies only to NetBackup Enterprise Server.

If this entry is specified in `vm.conf`, barcode rule support for API robots is enabled.

Media Manager barcode rules allow you to override the default media mappings. Barcode rules are especially useful when the media used by multiple generations of the same tape drive is not differentiated by the vendor.

For example STK 9940A and STK 9940B drives use STK1R media, but write data at different densities. The drive must be configured as hcart or hcart2. You can specify a barcode rule for a series of barcodes to configure some of the media as hcart2. Other STK1R media not in this barcode range will be configured as hcart (the default for STK1R). Without an `API_BARCODE_RULES` entry, a robot inventory operation would configure all media of type STK1R as either hcart or hcart2, depending on how the drive was configured.

Authorization Required

`AUTHORIZATION_REQUIRED`

If this entry is specified in `vm.conf`, Media Manager and NetBackup utilities must have authorization to connect to `vmd`; or a `SERVER` entry must be present in the `vm.conf` file. This entry is recommended for maximum security, and is read and interpreted on the hosts where `vmd` is running.

If this entry is not specified, Media Manager and NetBackup utilities may connect to `vmd` without specific authorization, except in the case when a non-matching `SERVER` entry is present in `vm.conf`.

Automatically Empty Robot MAP

`AUTO_UPDATE_ROBOT`

If this entry is specified in the `vm.conf` file of the media server with a TL8 or TLD robotic control daemon, the Media Access Port (MAP) of the robot will be emptied into the robotic library and the volume database will be updated.

This entry only operates with TL8 or TLD robots that post a unit attention when their MAP has been opened. Since most robotic libraries with multiple partitions do not post a unit attention when the MAP has been accessed, using this entry is not recommended with partitioned libraries.

AVRD Scan Delay

`AVRD_SCAN_DELAY = number_of_seconds`

If this entry is specified in `vm.conf`, `avrd` will wait *number_of_seconds* between normal scan cycles. This entry is read and interpreted on the host where `avrd` is running.

You can use this entry to minimize tape mount times. Without this entry present, a mount request is delayed by an average of 7.5 seconds.

The minimum for *number_of_seconds* is 1. The maximum is 180. A value of zero is converted to 1 second. The default value is 15 seconds. Using a value greater than the default will delay mount requests and the displaying of drive status information in the Device Monitor.

Caution Setting *number_of_seconds* to a value that allows media to be changed within one scan cycle could cause NetBackup to be unaware of a media change and cause a loss of data.

AVRD Pending Status Delay

`AVRD_PEND_DELAY = number_of_seconds`

If this entry is specified in `vm.conf`, `avrd` will wait *number_of_seconds* before displaying a pending status (PEND) in the Device Monitor. This entry is read and interpreted on the host where `avrd` is running.

Some server operating systems (Windows, Tru64, and HP-UX) report PEND if the drive reports Busy when a volume is unmounted. You can use this entry to minimize the display of this misleading status.

The minimum for *number_of_seconds* is zero. The maximum is 255. The default value is 180 seconds.

Cleaning Drives Timeout

`CLEAN_REQUEST_TIMEOUT = minutes`

You can add this entry in `vm.conf` to specify how long Media Manager will wait for a drive to be cleaned before removing the cleaning request from the cleaning queue. The cleaning request is normally removed from the queue, if the request has not been processed after 30 minutes.

minutes can be from 1 to 144000 (100 days). The default value is 30 and a value of zero is converted to the default value of 30.

Client Port Range

`CLIENT_PORT_WINDOW = start end`

If this entry is specified in `vm.conf`, you can specify the range of non-reserved ports on this host that are used for connecting to `vmd` on other hosts. This entry is read and interpreted on the hosts where `vmd` is running.

For example, the following entry permits ports from 4800 through 5000:

```
CLIENT_PORT_WINDOW = 4800 5000
```

The operating system determines the non-reserved port to use in the following cases:

- You do not specify a `CLIENT_PORT_WINDOW` entry
- You specify a value of zero for *start*.

Connect to Firewall Options

`CONNECT_OPTIONS = server_name 0 0 [0|1|2]`

You can add this entry in `vm.conf` to specify options that are designed to enhance firewall efficiency with Media Manager. Server connection options can be any of the following: use `vnetd` or the daemon's port number, use only `vnetd`, or use only the daemon's port number.

You can specify `CONNECT_OPTIONS` entries for multiple servers and can also use a similar entry and add it to the NetBackup configuration file (`/usr/openv/netbackup/bp.conf`). See the NetBackup system administrator's guide for details.

server_name is the name of the media server (or SAN media server) to be connected to and the server must be at NetBackup level 4.5 for `vnetd` to operate correctly.

The first and second settings currently are not used. Specify zero for these settings.

The third setting indicates the connection method to use to connect to *server_name* as follows:

- A value of 0 specifies to connect to a daemon on the server using `vnetd` if possible, otherwise connect using the traditional port number of the daemon.
- A value of 1 specifies to connect to a daemon on the server using `vnetd` only.
- A value of 2 specifies to connect to a daemon on the server using the traditional port number of the daemon only (2 is the default value).

The following are some examples:

```
CONNECT_OPTIONS = shark 0 0 0
```

This entry specifies that connections to `vmd` and robotic daemons on the server named shark can use either `vnetd` or the daemon's port number.

```
CONNECT_OPTIONS = dolphin 0 0 1
```

This entry specifies that connections to `vmd` and robotic daemons on the server named dolphin must use `vnetd`.

```
CONNECT_OPTIONS = perch 0 0 2
```

This entry specifies that connections to `vmd` and robotic daemons on the server named perch must use the daemon's port number.

DAS Client Name

`DAS_CLIENT = client_name`

This configuration entry applies only to NetBackup Enterprise Server

If this entry is specified in `vm.conf`, you specify the DAS client name that the TLM robot uses for communications with the DAS/SDLC server. By default this client name is the host name of the Media Manager server. This entry is read and interpreted on the host where `tlmd` is running.

See the appendix, "ADIC Distributed AML Server/Scalar Distributed Library Controller" on page 507 for more information.

Days To Keep Debug Logs

`DAYS_TO_KEEP_LOGS = days`

If this entry is specified in `vm.conf`, you can specify the number of days to keep debug logs before `vmd` deletes them. This entry is read and interpreted on the hosts where `vmd` is running.

A value of zero means that the logs are not deleted. The default is zero.

Device Host Entries

`DEVICE_HOST = host_name`

This configuration entry applies only to NetBackup Enterprise Server

Note These entries are not used by the NetBackup Administration Console.

If this entry is specified in `vm.conf`, it specifies a host that is to be included when running the Media Manager configuration analyzer interface from the command line. This entry is read and interpreted on the host where the configuration analyzer is running.

Entries are also added when `vmd` (the volume daemon) restarts, based on robot host names appearing in volume groups.

Disallow Non-NDMP Request on NDMP Drive

`DISALLOW_NONNDMP_ON_NDMP_DRIVE`

This entry is read and interpreted on the host where the robotic daemon or process is running.

In NetBackup, all read types of operations (restore, the read-portion of duplicates, import, and verify) and the write-portion of duplicates are not scheduled. Therefore, these operations compete for available drives.

NetBackup attempts to use an available drive based on the type of request as follows:

- For a NDMP backup or restore request, the drive must be a NDMP drive.
- For a non-NDMP request of any kind, NetBackup always tries to find an available non-NDMP drive. If a non-NDMP drive is not available, and a NDMP drive *is* available, the operation will be done using the slower NDMP drive.

  If a `DISALLOW_NONNDMP_ON_NDMP_DRIVE` entry is specified in `vm.conf` on a given master or media server (or SAN media server), NetBackup will *not* assign a non-NDMP request to available NDMP drives.

  Be aware when specifying this entry, that because some operations may have to wait for available non-NDMP drives to become available, the media mount timeout value may have to be increased. You can increase this value by using an entry in the UNIX `bp.conf` file or selecting **Host Properties** > **Master Server** > **Global NetBackup Attributes** on Windows.

Do Not Eject Standalone Tapes

`DO_NOT_EJECT_STANDALONE`

If this entry is specified in `vm.conf` on a given host, tapes in standalone drives will not be ejected when a backup has completed on that host (tapes will be ejected if end of media is reached during a backup). This entry is read and interpreted on the host where the standalone drives are defined.

This entry can be used in a NetBackup environment where it is desirable to keep a standalone drive ready after successful backups are performed.

Enable Automatic Path Remapping

`ENABLE_AUTO_PATH_CORRECTION`

If this entry is specified in `vm.conf`, it enables automatic device path remapping. If this entry is present when the device daemon (`ltid`) is started, an attempt is made to discover attached devices and automatically update the device configuration for any device paths that are incorrect in the device configuration. This entry is read and interpreted on the host where `ltid` is running

New devices will not be added. Using this option will increase the amount of time it takes for `ltid` to restart.

Device path remapping is enabled by default on Windows servers.

Enable Robot Authorization

`ENABLE_ROBOT_AUTH`

Robot authorization extends the scope of Media Manager enhanced authorization to include the robot daemons (or services). If robot authorization is enabled, the robot daemons authenticate and authorize incoming requests so that a subset of robot functions can be used by authorized users.

If this entry is specified in `vm.conf` on the master and media servers (or SAN media servers), robot authorization is enabled.

By default robot authorization is disabled.

Inventory Robot Filter

`INVENTORY_FILTER = robot_type robot_number mode value1 [value2 ...]`

This configuration entry applies only to NetBackup Enterprise Server.

Used for robotic inventory filtering in ACS, TLH, or LMF robot types. This entry must be added to the configuration file (`vm.conf`) on the media server (or SAN media server) where you plan to do the robotic inventory. This entry is read and interpreted on the host where `vmcheckxxx` and `vmupdate` are running.

Note This entry is required if you are doing a robot inventory for an ACS robot and the ACS library software host is an STK Library Station.

robot_type can be ACS, TLH, or LMF.

robot_number is the number of the robot as was configured in Media Manager.

mode is `BY_ACS_POOL` for ACS, `BY_CATEGORY` for TLH, or `BY_PREFIX` for LMF robot types.

The following are some examples:

```
INVENTORY_FILTER = ACS 0 BY_ACS_POOL 4 5
INVENTORY_FILTER = TLH 0 BY_CATEGORY FFFA CDB0
INVENTORY_FILTER = LMF 0 BY_PREFIX zzz yy
```

See the appendices, “STK Automated Cartridge System (ACS)” on page 473, “IBM Automated Tape Library (ATL)” on page 493, or “Fujitsu Library Management Facility (LMF)” on page 519 for more information.

LMF Media Mapping

`LMF_mediatype = Media_Manager_mediatype`

This configuration entry applies only to NetBackup Enterprise Server.

If this entry is specified in `vm.conf`, Fujitsu LMF media types in LMF robots are mapped to Media Manager media types. This entry is read and interpreted on the host where `vmcheckxxx` and `vmupdate` are running as part of the robot inventory operation.

See the appendix, "Fujitsu Library Management Facility (LMF)" on page 519 for more information.

Media Access Port Default for ACS Robots

`MAP_ID = robot_num map_ID`

This configuration entry applies only to NetBackup Enterprise Server.

This entry in `vm.conf` sets the Media Manager default for the Media Access Port that may be used for ejecting media from ACS (Automated Cartridge System) robots. This default is highlighted as a choice in the Media Manager and Vault administrative GUIs, but the user can also select other Media Access Ports for ejects.

If the access port specified by the MAP ID entry is not available or this entry is not present, the default media access port selection process will be used. This selection process matches the number of media specified to be ejected to the smallest access port that will hold that number of media, and uses that port.

If multiple MAPs are selected by the user, the MAP ID entry is not used and the nearest-MAP algorithm is used (see "Adjacent LSM Specification for ACS Robots" on page 383).

robot_num is the robot number. *map_ID* is in the format of an ACS CAP (Cartridge Access Port) ID and cannot contain any spaces.

The following example specifies the MAP ID for ACS robot number 700. The ACS CAP ID of 0,1,0 is used.

```
MAP_ID = 700 0,1,0
```

Media ID Generation

`MEDIA_ID_BARCODE_CHARS = robot_num barcode_length media_ID_rule`

Note To use this entry, the robot must support barcodes and the robot type cannot be one of the API robots.

If this entry is specified in `vm.conf`, it controls Media Manager media ID generation. This entry is read and interpreted on the host where `vmcheckxxx` and `vmupdate` are running as part of the robot inventory operation.

You choose how media IDs are created by defining rules that specify which characters of a barcode on tape will be used. You also can specify alphanumeric characters to be inserted in the ID.

Multiple media ID creation entries can be specified, allowing media ID generation to be specific for each robot; or for each barcode format having different numbers of characters in the barcode. This allows flexibility for multi-media.

If `MEDIA_ID_BARCODE_CHARS` entries are not present in `vm.conf` or you enter an invalid entry, Media Manager uses the right-most (the last) six characters of the barcode to create its media ID as the default.

robot_num is the robot number.

barcode_length is the length of the barcode.

A *media_ID_rule* consists of a maximum of six fields delimited by colons. Numbers in the fields of the rule define the positions of the characters in the barcode that are to be extracted (numbering is from the left). For example, 2 in a field extracts the second character from the barcode. The numbers can be specified in any order.

Characters prefixed by # in a field, result in that character being inserted in that position in the generated ID. Any alphanumeric characters that are specified must be valid for a media ID. You can use rules to create media IDs of many varied formats, but keep in mind that the difference in the label on the media and the generated media ID may make it difficult to manage your media. The following is an example rule and the resulting generated media ID:

```
Barcode on the tape: 032945L1
Media ID rule:       #N:2:3:4:5:6
Generated media ID:  N32945
```

Also see “Media ID Generation Rules” on page 347.

Media ID Prefix

`MEDIA_ID_PREFIX = media_id_prefix`

If this entry is specified in `vm.conf`, it defines the media ID prefixes to use for media without barcodes. This entry is read and interpreted on the host where `vmcheckxxx` and `vmupdate` are running as part of the robot inventory operation.

The best way to add media to a robot is to use the Robot Inventory Update Volume Configuration operation.

See “Media Settings Tab (Advanced Options)” on page 180.

Not Allowing a Host To Manage Databases

`NOT_DATABASE_HOST`

If this entry is specified in `vm.conf`, any requests to add, change, or delete any records in the volume, volume pool, or barcode rule databases will be denied. This is useful if you wish to enforce only one volume database in an operating environment. In that case, add this entry in the `vm.conf` file of all the media servers (*except* the volume database host) to prevent other hosts from having their own volume database.

Preferred Group

`PREFERRED_GROUP = netgroup_name`

If this entry is specified in `vm.conf`, it is used by all callers in Media Manager and NetBackup (other than `bpgetmedia` and `bptm`) for authentication / authorization for `vmd`. This entry is read and interpreted by all callers that are connecting to `vmd`.

netgroup_name is case sensitive.

If this entry is specified, a check is made to determine if the user is in the netgroup using the `innetgr()` function. If a `PREFERRED_GROUP` entry is not specified or the user is not a member of the netgroup, the local group name is obtained.

The following is an example:

```
PREFERRED_GROUP = nbadmins
```

Prevent Media Removal (for TL8 Robots)

`PREVENT_MEDIA_REMOVAL`

This entry is read and interpreted on the host where the robot control daemon or process (`tl8cd`) is running.

Specifying this entry changes the default operation for TL8 robots. Without this entry present, Media Manager allows the removal of media.

If this entry is specified in `vm.conf`, TL8 robots will execute the SCSI command `PREVENT MEDIUM REMOVAL`. You then will not be able to open the robot's main door or gain access to the media access port while the robotic control daemon is running.

▼ To override this action

Do one of the following:

- ❖ Use the test utility and execute `allow media removal`.

- Use inject/eject for access, when adding or moving volumes.

Random Port Numbers

`RANDOM_PORTS = YES|NO`

If this entry is specified in `vm.conf`, it specifies whether Media Manager chooses port numbers randomly or sequentially when Media Manager requires a port number for communication with Media Manager on other hosts. This entry is read and interpreted on hosts where `vmd` is running.

If `RANDOM_PORTS = YES` is specified or a `RANDOM_PORTS` entry is not specified (the default), Media Manager chooses port numbers randomly from those that are free in the allowed range. For example, if the range is from 1024 through 5000, Media Manager chooses randomly from the numbers in this range.

If `RANDOM_PORTS = NO` is specified, Media Manager chooses numbers sequentially, starting with highest number that is available in the allowed range. For example, if the range is from 1024 through 5000, Media Manager chooses 5000 (assuming it is free). If 5000 is being used, port 4999 is chosen.

If you do not specify random ports in the NetBackup configuration, you should also specify RANDOM_PORTS = NO in the Media Manager configuration file (`vm.conf`).

▼ **To specify no random ports in the NetBackup configuration file**

Do one of the following:

- Specify `RANDOM_PORTS = NO` in the `bp.conf` file on UNIX.
- Use the NetBackup **Host Properties** on Windows.

Cluster Name, Media Manager Name, Required Network Interface

```
CLUSTER_NAME = cluster_alias
MM_SERVER_NAME = host_name
REQUIRED_INTERFACE = host_name
```

These three entries are used in determining the server name others should use when referring to this server. The algorithm for determining the server name is as follows:

1. Use the `CLUSTER_NAME` entry if present in `vm.conf`.
2. Use the `MM_SERVER_NAME` entry if present in `vm.conf`.

3. Use the `REQUIRED_INTERFACE` entry if present in `vm.conf`.

4. Use the same name that NetBackup is using, as set in `bp.conf`.

5. Use the `gethostname()` name.

If the `REQUIRED_INTERFACE` entry is present in `vm.conf`, it specifies the network interface that Media Manager uses when connecting to another Media Manager server. This entry is read and interpreted on the host where the required interface is needed.

A Media Manager server can have more than one network interface and by default, the operating system determines the one to use. To force Media Manager connections to be through a specific network interface, use `REQUIRED_INTERFACE` and specify the network host name of that interface.

Refer to the NetBackup system administrator's guide for more information on NetBackup network configuration.

Return Media to the Scratch Pool

`RETURN_UNASSIGNED_MEDIA_TO_SCRATCH_POOL = YES|NO`

This entry is read and interpreted on hosts where `vmd` is running.

If `RETURN_UNASSIGNED_MEDIA_TO_SCRATCH_POOL = YES` is specified or if no entry is specified in `vm.conf`, Media Manager returns expired and unassigned media (media that was originally from the same scratch pool) to the scratch volume pool automatically.

If `RETURN_UNASSIGNED_MEDIA_TO_SCRATCH_POOL = NO` is specified, the automatic behavior of returning media to the scratch pool is disabled and must be done using one of the Media Manager administration interfaces.

Scratch Pool Configuration

`SCRATCH_POOL = pool_name`

If this entry is specified in `vm.conf`, the specified volume pool is configured as the scratch pool. This entry is read and interpreted on hosts where `vmd` is running.

The scratch pool is a special volume pool from which media is moved as needed into volume pools that have no available media.

You can specify any scratch pool name, except the names: NetBackup, DataStore, or None. If the specified volume pool does not exist, Media Manager creates a pool and sets the host to ANYHOST, the user to root, the group to NONE, and the description for the pool to Scratch Pool.

If you subsequently delete this entry, the specified volume pool will no longer be the scratch pool.

See "Adding a New Volume Pool or Scratch Volume Pool" on page 119.

Server Entry

`SERVER = host_name`

If this entry is specified in `vm.conf` it is used for security, and specifies which hosts can monitor and control devices on this host. This entry is read and interpreted on hosts where `vmd` is running.

Without any `SERVER` entries and authentication enabled, any host can manage the devices and volumes on the local host. For security you can add entries allowing only specific hosts to remotely access the devices. If a host's `vm.conf` file contains any `SERVER` entries, there must also be a `SERVER` entry for that host or it will not be able to manage its own devices.

SSO DA Re-register Interval

`SSO_DA_REREGISTER_INTERVAL = minutes`

This configuration entry applies only to NetBackup Enterprise Server.

This `vm.conf` entry is used only with the shared storage option (SSO) feature and is read and interpreted on the host where `ltid` is running.

`ltid` on a scan host periodically re-registers its shared drives with `vmd/DA` to ensure that it is still providing the drive scanning function on behalf of other hosts sharing the drives. This re-registration allows conditions such as a device allocator restart to have minimal impact on use of shared drives.

The default for the re-registration interval is 5 minutes. You can use this entry to tune this interval. After adding this entry, `ltid` must be stopped and restarted for the change to take effect.

SSO DA Retry Time

`SSO_DA_RETRY_TIMEOUT = minutes`

This configuration entry applies only to NetBackup Enterprise Server.

This `vm.conf` entry is used only with the shared storage option (SSO) feature and is read and interpreted on the host where `ltid` is running.

If `ltid` encounters problems during communications with `vmd/DA`, or a failure while attempting to reserve a shared drive, `ltid` delays before trying again.

The default value for the delay is 3 minutes. You can use this entry to tune this delay period. After adding this entry, `ltid` must be stopped and restarted for the change to take effect.

SSO Host Name

`SSO_HOST_NAME = host_name`

This configuration entry applies only to NetBackup Enterprise Server.

This `vm.conf` entry is used only with the shared storage option (SSO) feature and is read and interpreted on the host where `ltid` is running.

This entry specifies the name used by the current host to register, reserve, and release shared drives with `vmd/DA`. The default is the local host name.

SSO Scan Ability Factor

`SSO_SCAN_ABILITY = scan_factor`

This configuration entry applies only to NetBackup Enterprise Server.

This `vm.conf` entry is used only with the shared storage option (SSO) feature and is read and interpreted on the host where `ltid` is running.

A scan ability factor can range from zero to 9, with a default value of 5. This factor allows the assignment of scan hosts to be prioritized, if a drive's scan host changes. Scan hosts that have a higher scan ability factor are chosen first.

In some SSO configurations, you may have servers that are undesirable for use as the scan host for a drive. This may be because they have limited resources, are behind firewalls, or are being administered by people other than NetBackup administrators. These servers can be configured to never become the scan host for any drive. A *scan_factor* of zero means that a server will not become the scan host.

Caution A drive is unavailable for use until a scan host can be assigned for it. If all hosts that register for a particular drive use *scan_factor* = 0, the drive will enter an unusable state until a host with a *scan_factor* of non-zero registers for the drive. If all hosts with a *scan_factor* of non-zero have the drive DOWN, then again the drive becomes unavailable due to the lack of a scan host.

The decision to use a *scan_factor* of zero for a server, reduces the level of resiliency in your SSO configuration. Careful attention to those servers that can be a scan host is required, as the loss of a scan host for a drive makes it unavailable to any server.

Release Level Considerations

Media Manager servers prior to NetBackup 4.5 FP3 cannot be configured with a *scan_factor* of zero. If zero is specified, the default value of 5 is used.

NetBackup release 4.5 (or any 4.5 MP release) device allocation (DA) hosts will accept registrations from NetBackup 4.5 FP3 media servers (or SAN media servers) with a *scan_factor* of zero. A 4.5 release device allocation host handles the zero scan factor the same as any other legal value. A value of zero is just a scan factor less than one.

Device allocation hosts running NetBackup releases 4.5 FP3 thru 5.0 will not select as a scan host servers that have a scan factor of zero. The case where all servers are registered with a value of zero, causing the drive to have no scan host, will not occur if any registered host is at the 4.5 release level (since this host will not send a zero scan factor). So, a device allocation host running NetBackup releases 4.5 FP3 thru 5.0 can have some hosts with a zero scan factor and work correctly in a mixed server environment.

TLH Media Mapping

`TLH_mediatype = Media_Manager_mediatype`

This configuration entry applies only to NetBackup Enterprise Server.

If this entry is specified in `vm.conf`, IBM ATL media types in Tape Library Half-inch (TLH) robots are mapped to Media Manager media types. This entry is read and interpreted on the host where `vmcheckxxx` and `vmupdate` are running as part of the robot inventory operation.

See the appendix, "IBM Automated Tape Library (ATL)" on page 493 for more information.

TLM Media Mapping

`TLM_mediatype = Media_Manager_mediatype`

This configuration entry applies only to NetBackup Enterprise Server.

If this entry is specified in `vm.conf`, DAS/SDLC media types in Tape Library Multimedia (TLM) robots are mapped to Media Manager media types. This entry is read and interpreted on the host where `vmcheckxxx` and `vmupdate` are running as part of the robot inventory operation.

See the appendix, "ADIC Distributed AML Server / Scalar Distributed Library Controller" on page 507 for more information.

Vault Media Description Reset

`VAULT_CLEAR_MEDIA_DESC`

When NetBackup media is returned from the off-site vault during a typical tape rotation, it is expired and is ready for reuse by new backups. To avoid confusion, it may be helpful to clear the old media description information when an expired tape is returned to the robot.

If this entry is specified in `vm.conf`, the media description field will be cleared when other Vault information is cleared from the Media Manager volume database.

Verbose Message Logging

`VERBOSE`

If this entry is specified in `vm.conf`, all Media Manager components on the host are started with verbose logging enabled.

Use this option only if problems occur or if requested by VERITAS support. After the problem is resolved, remove any debug logs that were created or add a `DAYS_TO_KEEP_LOGS` entry.

Example vm.conf File

The following is an example of a `vm.conf` file, on host yak:

```
SERVER = yak

SERVER = whale

MEDIA_ID_PREFIX = NV

MEDIA_ID_PREFIX = NETB

ACS_3490E = HCART2

SCRATCH_POOL = ScratchPool
```

Using tpconfig B

This appendix explains how to configure drives and robots using the device management configuration utility, `tpconfig`. This menu-driven utility creates and updates the configuration files that define drives and robots to Media Manager.

There are also other Media Manager interfaces available to configure drives and robots (see "Media Manager Administrator and User Interfaces" on page 9). The terminology, general concepts, and results are the same, regardless of which interface you use.

Terms and Concepts

The following Media Manager terms and concepts are used when configuring drives and robots using `tpconfig`. See "Media Manager Terminology" on page 1 for an extensive list of terms.

Robot Number

You assign a robot number when you add a robot to the configuration. `tpconfig` prompts you to enter a number or accept the next available robot number which it displays. This number identifies the robot in displays and listings, and it follows the robotic type in parentheses, such as TL8(2). It is also used when entering the robot's media in the volume database, as described in "Managing Media" on page 101.

The following point applies only to NetBackup Enterprise Server.

If you are configuring robots on multiple systems, robot numbers must be unique. If you are connecting drives from a robot (for example, drives in a Tape Library 8MM (TL8)) to multiple systems, you must specify the same robot number for the robot on both systems.

Robotic Control Path

For most robots, you or the operating system creates this path in the `/dev` directory when you add a robot to the configuration. When `tpconfig` prompts you, enter the path to the robotic control as found in the `/dev` directory. If the entries do not exist, see the NetBackup Media Manager device configuration guide.

The following point applies only to NetBackup Enterprise Server.

For API robots, see the appendices in this guide for information on configuring robotic control. The control path to a robot may be on another host. If so, enter the host name of the host instead of a path. When you define a robot that is actually controlled by another host, the robot number must be the same on both hosts.

Host Name

This is a NetBackup Enterprise Server topic.

You must specify a host name in the following cases. When you add

- An ACS robot, enter the name of the host where the ACS Library Software resides, instead of a robotic control path.

  See the ACS appendix, "STK Automated Cartridge System (ACS)" on page 473.

- A TLM robot, enter the DAS/SDLC server name instead of a robotic control path.

  See the TLM appendix, "ADIC Distributed AML Server/Scalar Distributed Library Controller" on page 507.

- An LMF, TL8, TLD, or TLH robot that has robotic control on another host, you are prompted for the host name of that host.

  See also "Volume Database Host Name" on page 403.

No Rewind On Close Device Name

You specify a no rewind on close device name when you add a drive. Usually the device name is preceded or followed by the letter n. If the device name entries do not exist, you must create them as explained in the NetBackup Media Manager device configuration guide.

In `tpconfig` displays and listings, these device names are shown under the heading DrivePath.

Character Device Name

Character device name applies only to optical disk devices. A drive used as a character device uses a complete 512-byte block each time it writes (note that some systems may use 1024 byte blocks). If less than 512 bytes are used, the remaining bytes are padded out. A character device is also referred to as a raw device. NetBackup and Storage Migrator use character mode.

You specify a device name when you add an optical disk to the configuration. When prompted, enter the path name to the device as found in the `/dev` directory. If the entries do not exist, you must create them as explained in the NetBackup Media Manager device configuration guide.

In `tpconfig` displays and listings, the character device name appears under the heading DrivePath.

Volume Header Device Name

Note Volume headers do not apply to all systems.

The volume header device name is used internally, but must be specified when adding an optical drive to a configuration. When prompted, enter the path name to the device as found in the `/dev` directory. To display the volume header device name, choose the Update or Delete option from the Drive Configuration menu.

On Solaris systems, the `MAKEDEV` command may have to be run first to create these entries. For more information, see the NetBackup Media Manager device configuration guide and the UNIX `MAKEDEV(8)` command.

Drive Status

Drive status indicates whether Media Manager considers a drive available. You specify the initial drive status when you add a drive to the configuration. You can change the status, using the Update option of the Drive Configuration menu in `tpconfig` or if `ltid` has been started, by using a Device Monitor interface or `vmoprcmd`.

Volume Database Host Name

The volume database host name identifies the host where the volume database is located. A volume database host name is associated with each robot and the entire set of standalone drives on a device host.

The following point applies only to NetBackup Enterprise Server.

You can change or view the volume database host by using the Volume Database Host Configuration menu.

Starting the tpconfig Utility

You can start `tpconfig` from the `vmadm` Media Management menu or using the following command from the command line. You must have root user privileges.

```
/usr/openv/volmgr/bin/tpconfig
```

The following menu appears:

```
Device Management Configuration Utility

1) Drive Configuration
2) Robot Configuration
3) Volume Database Host Configuration
4) Print Configuration
5) Help
6) Quit

Enter option:
```

Note If the Media Manager device daemon is running, you should stop it with the `stopltid` command (see "Media Manager Device Daemon (ltid)" on page 255).

The following table describes the main menu choices:

Option	Menu Choice	Description
1	Drive Configuration	Opens a menu for adding, deleting, updating definitions of drives, or listing definitions of drives and robots in the drive and robot databases.
2	Robot Configuration	Opens a menu for adding, deleting, updating definitions of robots, or listing definitions of drives and robots in the drive and robot databases.
3	Volume Database Host Configuration	Opens a menu for updating or listing the name of the host where the volume database for a specific device resides.
4	Print Configuration	The List Configuration commands on subsequent menus allow you to display the current configuration on the screen or write it to a file. Specifying just the -d option on the tpconfig command also writes the current configuration to stdout (the screen) without invoking the menus. Other command options are available. Run tpconfig -help or see tpconfig in the NetBackup commands for UNIX reference guide.
5	Help	Online help is available on the main menu and most submenus.

Option	Menu Choice	Description
6	Quit	Terminates the utility and returns you to the UNIX prompt.

You can return to the main menu from anywhere in the utility by entering Ctrl C or using the Escape key.

Adding Robots

When you configure robots and drives, the most efficient process is to first add the robot using the Robot Configuration menu and then add the drives using the Drive Configuration menu.

If you want to reconfigure drives configured as standalone to indicate that they are in a robot, use the Update option of the Drive Configuration menu. See "Updating Drive Configurations" on page 408.

▼ To add a robot

1. Select the Robot Configuration menu. If any robots exist, they are displayed above this menu.

2. Select the Add option.

   From the list of possible robot types, select the one you want to add.

3. Enter a robot number you know is unused or accept the default robot number.

4. Indicate where the robotic control for the library is by entering the device file path or library name. The Help option on the Robot Configuration menu has examples of typical path names.

5. *This step applies only to NetBackup Enterprise Server.*

   a. If robotic control is on another host, enter that host name.

      For an ACS robot you must enter the name of the ACS library software host. See the appendix, "STK Automated Cartridge System (ACS)" on page 473.

      For a TLM robot, you must enter the name of the DAS/SDLC server. See the appendix, "ADIC Distributed AML Server/Scalar Distributed Library Controller" on page 507.

b. If robotic control is on this host, enter the device file path or library name. The Help option on the Robot Configuration menu has examples of typical path names.

For an ACS robot you enter the name of the ACS library software host. See the appendix, "STK Automated Cartridge System (ACS)" on page 473.

For an LMF robot, enter the library name rather than the path name. See the appendix, "Fujitsu Library Management Facility (LMF)" on page 519.

For a TLH robot, enter the LMCP Device File, if this is an AIX system. Otherwise, enter the Automated Tape Library Name. See the appendix, "IBM Automated Tape Library (ATL)" on page 493.

For a TLM robot, you enter the name of the DAS/SDLC server. See the appendix, "ADIC Distributed AML Server/Scalar Distributed Library Controller" on page 507.

6. If no conflicts are detected with the new configuration, you see a message that the robot has been added.

Adding Drives

▼ To add a drive

1. Select the Drive Configuration menu.

2. Select the Add option.

3. Type a drive name or use the Enter key to use the default drive name that is shown.

Specify a name that will be used by Media Manager to identify the drive.

The following point applies only to NetBackup Enterprise Server.

If you are using the shared drives option (see step 9), all hosts that are sharing the same physical drive must use the same name for the drive. Descriptive drive names are recommended.

4. From the list of possible drive types displayed, select the one you want to add.

5. Enter the no rewind on close device path as shown in the `/dev` directory.

If the device is an optical disk, enter the character device and volume header device file paths, from the `/dev` directory (volume headers are not applicable to all systems).

The Help option on the Drive Configuration menu has examples of typical path names.

6. Enter the drive status (Up or Down).

7. If a robot exists that the drive could be added to, indicate whether the drive should be added to the robot or be a standalone drive.

   If there are no robots to which the drive can be added, `tpconfig` automatically adds the drive as a standalone drive.

   If you choose to add a drive to a robot and more than one possible robot exists, enter the robot number that will control the drive.

   Depending on the type of robot, you may also be prompted to add the robot drive number (see "Robot Drive Number" on page 67).

8. *This step applies only to NetBackup Enterprise Server.*

   For a drive in an ACS robot, you are prompted for four drive identifiers. For more information on ACS robots, see the appendix "STK Automated Cartridge System (ACS)" on page 473.

   For a drive in a TLH robot, you are prompted for an IBM device number. For more information see the appendix "IBM Automated Tape Library (ATL)" on page 493.

   For a drive in a TLM robot, you are prompted for a DAS/SDLC drive name. For more information see the appendix "ADIC Distributed AML Server/Scalar Distributed Library Controller" on page 507.

   For a drive in an LMF robot, see the appendix "Fujitsu Library Management Facility (LMF)" on page 519 to determine what to enter for the robot drive.

9. *This step applies only to NetBackup Enterprise Server.*

   If you have the shared storage option (SSO) enabled, you are asked if this drive will be shared with multiple hosts (answer y/n).

10. When finished, you see a message that the drive has been added, followed by a listing of the drive.

Updating Robot and Drive Configurations

Updating Robot Configurations

▼ **To change the robot number or the robotic control path**

1. On the main menu, choose Robot Configuration.

Note If only one robot is configured, step 2 is skipped.

2. On the Robot Configuration menu, choose Update. The following prompt is displayed

```
Enter robot number to update:
```

Enter the number of the robotic library you want to change.

3. The following prompt is displayed:

```
Enter new robot number or <RETURN> to use existing (n):
```

Enter a new robot number to replace the existing robot number, or press Enter to retain the current robot number.

4. You are prompted to enter robotic control information. The actual prompts depend on the type of robotic library you are updating.

Enter the appropriate robotic control path or host name associated with the robot.

When you are done, a message confirming that the robot has been updated is displayed.

Updating Drive Configurations

You can change information for a drive (for example, you can add it to a robot).

▼ **To change information for a drive**

1. On the main menu, choose Drive Configuration.

2. On the Drive Configuration menu choose Update.

3. Enter the name of the drive you want to update.

4. The current drive information is displayed, followed by prompts to change each field. Enter a new value or use the Enter key to keep the existing value.

   One of the prompts asks if you want to configure the drive in a robot and, if so, adds the drive immediately or gives you the opportunity to choose from any existing robot of the appropriate type.

5. When you have responded to all prompts, a revised Drive Information display appears, along with the following prompt:

   ```
   Are you sure you want to UPDATE drive name xxxxx? (y/n) n:
   ```

6. A message confirming that the drive has been updated (or not updated) is displayed.

Deleting Drives and Robots

Deleting Drives

▼ **To delete a drive**

1. On the main menu, choose Drive Configuration.
2. In the Drive Configuration menu, choose Delete.
3. Enter the name of the drive you want to delete:
4. Drive information and a prompt similar to the following are displayed:

   ```
   Are you sure you want to DELETE drive name xxxxx? (y/n) n:
   ```

5. Enter y to delete the drive, or n (Enter key) to cancel the action.

   a. If you respond with y, a message confirming the drive has been deleted is displayed.

   b. If you respond with n, pressing any key returns you to the Drive Configuration menu and the delete action is canceled.

Deleting Robots

▼ To delete a robot

1. On the main menu, choose Robot Configuration.
2. On the Robot Configuration menu, choose Delete.

Note If only one robot is configured, step 3 is skipped.

3. The following prompt is displayed:

```
Enter robot number to delete:
```

4. A prompt similar to the following is displayed:

```
Deleting robotic definition:
TLD(0) robotic path = /dev/sg/c1t0d0s0, volume database host=vat
Any drives defined on this robot will be changed to standalone
drives
Do you want to proceed? (y/n) n:
```

5. Enter y to delete the robot, or n (or Enter key) to cancel the action.
   a. If you respond with y, a message confirming that the robot has been deleted is displayed.
   b. If you respond with n, pressing any key returns you to the Robot Configuration menu and the delete action is canceled.

Specifying the Volume Database Host

A volume database host is associated with each robot and set of standalone drives on a device host. It identifies the host where the volume database for the device is located.

By default, the volume database host name for standalone and robotic drives is the global device database host.

▼ To specify the volume database host

1. On the main menu choose Volume Database Host Configuration.

   The current volume database hosts for all defined devices are displayed, along with the Volume Database Host Configuration menu and a prompt.

2. Select Update to change the host name. The following prompt is displayed:

```
Enter robot number (or 'n' for standalone drives):
```

3. Make your selection. The following prompt is displayed:

```
Enter new Volume Database Host name:
```

4. Enter a new name. The updated list of host names is displayed, along with the menu options and prompt.

Multiple Volume Database Hosts

This is a NetBackup Enterprise Server topic.

You need to change the volume database host name, if volumes are defined on hosts other than the default hosts. This may be necessary, for example in a configuration that has been set up using multiple volume database hosts.

VERITAS recommends that the volumes for the entire configuration be defined in one volume database. Also, shared drive (SSO) configurations require that a common volume database host is used for all hosts where a shared drive is configured.

Although it is possible to maintain separate volume databases on multiple hosts, administration is more difficult. The `vmdb_merge` command can be used to merge volume, pool, and media databases. See the NetBackup commands guide for details.

Displaying and Printing Your Device Configuration

You can display the current configuration from every menu in `tpconfig` by using the Print Configuration option on the main menu, or the List Configuration option on the subsequent menus.

You can print the configuration using the Print Configuration option on the main menu. When prompted, specify a file where the configuration will be written, or press Enter to display the configuration on the screen.

In addition, you can specify the `-d` option on the `tpconfig` command to write the current configuration to standard output (stdout) without invoking the menus.

Using the Media Management Utility (vmadm) C

This appendix explains how to use the media management utility (`vmadm`) to add, delete, or change media in a Media Manager volume configuration. This utility has a character-based interface that can be used at most terminals.

There are also other Media Manager interfaces available to configure media (see "Media Manager Administrator and User Interfaces" on page 9). The terminology, general concepts, and results in the database are the same, regardless of which interface you use.

Starting vmadm

▼ **To start vmadm**

1. The Media Manager volume daemon, `vmd`, must be active to make any changes with `vmadm`, even though you can start the utility without `vmd` running.

   See "Starting and Stopping vmd" on page 413.

2. To start `vmadm`, enter `/usr/openv/volmgr/bin/vmadm` (requires root privileges).

Starting and Stopping vmd

You can control the Media Manager volume daemon, `vmd` in the following ways:

▼ **To start vmd from the UNIX prompt**

❖ Enter `/usr/openv/volmgr/bin/vmd`.

▼ **To start vmd from vmadm**

1. On the main menu, choose s for Special Actions.

2. Choose i for Initiate Media Manager Volume Daemon. This starts `vmd` and returns you to the Special Actions menu.

▼ To stop vmd from vmadm

1. On the main menu, choose s for Special Actions.
2. Choose t for Terminate Media Manager Volume Daemon. This stops `vmd` and returns you to the Special Actions menu.

The vmadm Main Menu

The main menu is similar to the following:

```
Volume Database Host:  shark
Media Management
-----------------
a) Add Volumes
d) Delete Volumes
m) Move Volumes
p) Print Information about Volumes

c) Configure Volume Pools
s) Special Actions

u) Device Configuration Utility

h) Help
q) Quit
ENTER CHOICE:
```

The Volume Database Host name displayed at the top of the main menu is the host where the volume database is located and the Media Manager volume daemon (`vmd`) is running.

The following table summarizes each main menu command. The remaining topics in this chapter explain how to perform common operations.

Character	Menu Choice	Summary
a	Add Volumes	Adds one or more volumes.
d	Delete Volumes	Deletes one or more volumes.
m	Move Volumes	Moves one or more volumes.
p	Print Information about Volumes	Prints or displays information about selected volumes based on criteria you provide.

Character	Menu Choice	Summary
c	Configure Volume Pools	Adds a new volume pool, deletes an existing one, changes information about a volume pool, or lists information about the currently defined volume pools.
s	Special Actions	Opens a menu with special actions.
u	Device Configuration Utility	Starts the `tpconfig` device configuration utility. See the appendix "Using tpconfig" on page 401.
h	Help	Provides on line help.
q	Quit	Terminates the utility and returns you to the UNIX prompt. You can abort many operations by pressing the ESC key.

Configuring Volume Pools

A volume pool identifies a logical set of volumes that are associated by usage rather than physical location. For example, you can create a volume pool for each storage application you are using. Then, as you add volumes to use with an application, you can associate them with a volume pool. You can also move volumes to a different pool later. Volumes associated with a particular volume pool are grouped together and protected from access by unauthorized users, groups, or applications.

Before adding volumes to a pool, you must add the pool and configure its attributes as explained in the following topics.

You do not have to configure a pool for NetBackup or DataStore. Media Manager automatically reserves a pool named NetBackup that you specify when adding NetBackup volumes and a pool named DataStore when adding DataStore volumes.

When you enter c from the main menu, the following menu appears:

```
      Display Mode:  BRIEF
Output Destination:  SCREEN

Configure Volume Pools
----------------------
a)  Add Pool
c)  Change Pool
d)  Delete Pool
l)  List Pools
s)  List Scratch Pools
```

```
m)  Mode (brief or full)
o)  Output Destination (screen or file)
h)  Help
q)  Quit Menu

ENTER CHOICE:
```

The following table summarizes the operations you can perform from this menu:

Character	Menu Choice	Summary
a	Add Pool	Defines a new volume pool. After choosing this option, you are prompted to define the following: ◆ Volume pool name - Name for the new volume pool. Enter a name of 20 ASCII characters or less. Names are case-sensitive, and no spaces or special characters are allowed. ◆ Description - Enter the description of the new volume pool (30 ASCII characters or less). ◆ Pool host name - Name of the host that can request and use volumes in this volume pool. Entering a specific host name allows only that host to access the volume pool. Using the default, ANYHOST, allows any host to access the volume pool. If you have a single NetBackup server, use ANYHOST or the name of the server (not a client). *The following point applies only to NetBackup Enterprise Server.* If you have multiple NetBackup servers (master and media servers), always set this value to ANYHOST (the default). ◆ Pool user name - Login name of the user that is allowed to request and use volumes in the volume pool. Entering a specific name allows only the processes running as that user to access the volume pool. If a different user requests the pool, then Media Manager verifies the group name (see Pool group name). Using the default, ANY, allows any user to access the pool. For NetBackup or Storage Migrator, enter root for the pool user name. ◆ Pool group name - Name of the user group that can request and use volumes in this volume pool. Entering a specific name allows any processes running as that user group to access the volume pool. Using the default, NONE, allows only the user specified by User Name to request or access the volume pool. All other users in any groups are denied access. ◆ Scratch pool - select Yes or No.

Character	Menu Choice	Summary
c	Change Pool	Changes the description, pool host name, pool user name, pool group name, or changes a pool to become the scratch pool. You are prompted for each of these items and Scratch pool - Yes or No.
d	Delete Pool	Deletes the volume pool and its allocated name, description, and access permissions.
l	List Pools	Lists the currently defined volume pools and their associated descriptions and permissions.
s	List Scratch Pools	Lists the currently defined scratch pools (if any are defined).
m	Mode (brief or full)	Toggles the display mode to BRIEF or FULL.
o	Output destination (screen or file)	Toggles the output destination between SCREEN and FILE (SCREEN is the default). If you choose to write to a file, you can define your own file name or you can use the default file, /tmp/vmadm_pool_output.
h	Help	Provides on line help.
q	Quit Menu	Terminates the menu.

Adding Volumes for Standalone Drives

Adding a Single Standalone Volume

▼ To add a volume

1. On the main menu, choose a for Add Volumes.

   The following prompt appears. Enter s to add a single volume.

   ```
   Add Single Volume, Range of Volumes, or Auto-Populate? (s/r/a):
   ```

2. You are prompted for the media type with a menu similar to the following that displays the possible types. Enter the number for the type of media you want to add.

   ```
   Adding Volumes
   --------------
   ```

```
Media Type
----------
1)   1/4" cartridge tape
2)   1/2" cartridge tape
3)   1/2" cartridge tape 2
4)   1/2" cartridge tape 3
5)   4MM cartridge tape
6)   8MM cartridge tape
7)   8MM cartridge tape 2
8)   8MM cartridge tape 3
9)   DLT cartridge tape
10)  DLT cartridge tape 2
11)  DLT cartridge tape 3
12)  DTF cartridge tape
13)  Optical disk rewritable
14)  Optical disk WORM
15)  1/2" cleaning tape
16)  1/2" cleaning tape 2
17)  1/2" cleaning tape 3
18)  4MM cleaning tape
19)  8MM cleaning tape
20)  8MM cleaning tape 2
21)  8MM cleaning tape 3
22)  DLT cleaning tape
23)  DLT cleaning tape 2
24)  DLT cleaning tape 3
25)  DTF cleaning tape
Enter Choice [1-25]:
```

3. If you are adding a cleaning tape, you are prompted for the number of cleanings you want available. For any other media type, the next step occurs immediately.

4. You are prompted to enter the media ID. If you selected an optical disk media type, you are prompted to enter a media ID for both side A of the platter and side B of the platter. Enter a 1 to 6 ASCII character name.

5. You are prompted for a description. Enter 1 to 25 characters of text to describe the media being added.

6. If the media is not a cleaning media type you are prompted to enter a number for the volume pool.

```
Volume Pool
----------
1)  None
2)  NetBackup
```

```
3)  oldpool
4)  newpool
5)  POOL1
6)  POOL2
Enter Choice:
```

Enter a number as follows:

- If you enter 1 (None) the volume is assigned to a generic volume pool and is available to any user or application.
- Enter 2 if you want the volume to be available only to NetBackup.
- Enter another choice to have the volume assigned to one of the volume pools listed.

7. For all media types, you are prompted to enter the physical location of the volume using a menu of possible locations, similar to the following menu for an 8mm cartridge tape. Enter 1 for a volume for a standalone drive.

```
Physical Location
-----------------
1)  Not in robotic device
2)  RSM - Removable Storage Manager
3)  TL8 - Tape Library 8MM
4)  TLD - Tape Library DLT
5)  TLM - Tape Library Multimedia
6)  TS8 - Tape Stacker 8MM
Enter Choice [1-6]:
```

8. You are prompted to enter the volume group, by a menu similar to the following. You may do any of the following actions:

- Choose from any existing standalone volume groups that allow this volume's media type.
- Elect not to associate the volume with any volume group (if the option is offered).
- Enter a new name of your own choice.
- Have a name generated by `vmadm`, if the name of volume group is not important in this case.

```
Volume Group
------------
1)  tl8grp1
2)  No Volume Group
3)  Specify New Volume Group Name
4)  Auto-Generate New Volume Group Name
Enter choice:
```

9. The action taken next depends on the media type you selected.
   - If you selected a tape media type, the volume is added at this point and you are returned to the main menu.
   - If you selected an optical disk, you are given the option to format the platters using `tpformat`. (Formatting may cause an operator mount request to occur on the host.) Choosing n adds the volume immediately and you are returned to the main menu. If you choose y and the formatting does not complete, the volumes are still added.

Note All platforms and operating systems do not support 1024 byte-per-sector platters. Most support only 512 byte-per-sector sizes. Before purchasing optical disk platters, check your vendor documentation to determine the sector sizes supported by your platform and operating system. VERITAS urges you to use platters that have been formatted.

Adding a Range of Standalone Volumes

▼ To add a range of volumes

1. On the main menu, choose a for Add Volumes.
2. The following prompt appears. Enter r to add a range of volumes.

```
Add Single Volume, Range of Volumes, or Auto-Populate? (s/r/a):
```

3. You are prompted for the media type with a menu similar to the following that displays the possible types. Enter the number for the type of media you want to add.

```
Adding Range of Volumes
-----------------------
Media Type
----------
1)   1/4" cartridge tape
2)   1/2" cartridge tape
3)   1/2" cartridge tape 2
4)   1/2" cartridge tape 3
5)   4MM cartridge tape
6)   8MM cartridge tape
7)   8MM cartridge tape 2
8)   8MM cartridge tape 3
9)   DLT cartridge tape
10)  DLT cartridge tape 2
11)  DLT cartridge tape 3
```

```
12)  DTF cartridge tape
13)  Optical disk rewritable
14)  Optical disk WORM
15)  1/2" cleaning tape
16)  1/2" cleaning tape 2
17)  1/2" cleaning tape 3
18)  4MM cleaning tape
19)  8MM cleaning tape
20)  8MM cleaning tape 2
21)  8MM cleaning tape 3
22)  DLT cleaning tape
23)  DLT cleaning tape 2
24)  DLT cleaning tape 3
25)  DTF cleaning tape
Enter Choice [1-25]:
```

4. If you selected to add a range of cleaning tapes, you are prompted to enter a single number which indicates the number of cleanings you want available on each volume in the range. For any other media type, the next step occurs immediately.

5. You are prompted for a description. Enter 1 to 25 characters of text to describe the media being added. This description applies to all of the volumes in the range.

6. You are then prompted to enter a number for the volume pool, as follows:

   - Enter 1 for a range of standalone volumes. If you enter 1, the volumes are associated with a generic volume pool and are available to any user or application.
   - Enter 2 if you want the volumes to be available to NetBackup only.
   - Enter another choice to have the volumes assigned to one of the volume pools listed.

```
Volume Pool
----------
1)  None
2)  NetBackup
3)  oldpool
4)  oldpool4
5)  POOL1
6)  POOL2
Enter Choice:
```

7. You are prompted to enter the physical location of the volumes using a menu of possible locations, similar to the following menu for an 8mm cartridge tape:

```
Physical Location
```

```
-----------------
1)  Not in robotic device
2)  RSM - Removable Storage Manager
3)  TL8 - Tape Library 8MM
4)  TLD - Tape Library DLT
5)  TLM - Tape Library Multimedia
6)  TS8 - Tape Stacker 8MM
Enter Choice [1-6]:
```

8. You are prompted to enter the volume group, by a menu similar to the following. You can do any of the following actions:

- Choose from any existing standalone volume groups that allow this volume's media type.
- Elect not to associate the volume with any volume group (if the option is offered).
- Enter a new name of your own choice.
- Have a name generated by `vmadm`, if the name of volume group is not important in this case.

```
Volume Group
------------
1)  tl8grp1
2)  No Volume Group
3)  Specify New Volume Group Name
4)  Auto-Generate New Volume Group Name
Enter choice:
```

9. You are prompted to enter the media ID naming mode with a menu displaying the possible modes. If you selected an optical disk media type, the display is as follows.

If you selected any device other than an optical disk media type, only options a through e are displayed.

```
Media ID Naming Mode
--------------------
a)  0 characters and 6 digits
b)  1 character  and 5 digits
c)  2 characters and 4 digits
d)  3 characters and 3 digits
e)  4 characters and 2 digits
f)  0 characters, 5 digits, and 1 character platter-side
g)  1 character,  4 digits, and 1 character platter-side
h)  2 characters, 3 digits, and 1 character platter-side
i)  3 characters, 2 digits, and 1 character platter-side
j)  4 characters, 1 digit,  and 1 character platter-side
Enter Choice:
```

Enter the desired naming mode. When the volumes are added, the digit field is incremented by one for each volume. (Only numbers are incremented.)

10. You are prompted for the media ID of the first volume:

```
Enter Media ID for first volume -- using naming mode e:
```

If you had selected naming mode e and entered the 4-character, 2-digit ID, tape01, the media ID of the first volume added would be TAPE01, the second TAPE02, and so on.

11. You are prompted for the number of volumes to add.

a. If you selected an optical disk media type, the prompt is as follows:

```
Enter Number of Platters (2 Volumes/Platters) in Range:
```

Each side of a platter is considered one volume. Entering the number 4, for example, causes eight volumes (four platters) to be added.

You are then given the option to format the platters being added using `tpformat`. Choosing n (no) adds the volumes immediately and you are returned to the main menu.

b. If you selected any media type other than optical disk, the prompt is as follows:

```
Enter Number of Volumes in Range:
```

12. The volumes are added to the database and you are returned to the main menu.

If any volume cannot be added (for example, if the range you specified overlaps with existing volumes), the operation aborts but volumes added before the failure remain in the database.

Adding Volumes to a Robot

Auto-Populating a Robot

You can use auto-populate for robots that support barcodes and for robots that do not support barcodes with some operational limitations (see “Robot Attributes” on page 305). The easiest way to add new media to a robot is to physically add the media and then use Media Manager’s auto-populate feature to update the volume database to agree with the contents of the robot. The database update includes automatic creation of media IDs.

If the robot *supports* barcodes and the volumes have readable barcode labels, auto-populate generates media IDs for new volumes based on the last six characters of the barcodes as the default or the specific characters that you specify if you are using Media ID generation rules.

When you use barcode rules, new media that is added through a barcode rule is also assigned a media type, pool name, maximum number of mounts (or cleaning count), and description (see "Configuring Barcode Rules" on page 467).

If the robot *does not* support barcodes or the media does not have readable barcodes, the new media IDs are based on a media ID prefix that you specify.

Using Auto-Populate

The auto-populate operation is the same as an inventory and update operation (see "Inventory and Update Robot Volume Configuration" on page 456).

▼ To use auto-populate

The following procedure refers you to the update procedure at the proper time.

1. Insert the new media into the robot.

2. Check the barcode capabilities of the robot and its media.

   Before starting an auto-populate operation, perform "Inventory and Compare Robot Volume Configuration" on page 454 and check whether the following are true:

   - The robot supports barcodes.
   - The new media that was inserted has readable barcodes.

3. If the robotic library does *not* support barcodes or the volume does *not* have readable barcodes, you may want to save the results of the verify for reference, in case you assign a media ID prefix later in this procedure. You do not need a prefix if the robot supports barcodes and the media has a readable barcode.

   You also may want to consider using the physical inventory utility (see "Using the Physical Inventory Utility for Non-Barcoded Media" on page 348).

4. Create barcode rules (optional).

   Refer to "Configuring Barcode Rules" on page 467 and create any additional barcode rules that you want to use for auto-populating the database, for the media you have inserted into the robot.

5. For robot types that are not API robots, create media ID generation rules (optional).

See "Media ID Generation Tab (Advanced Options)" on page 197 for more information.

6. For API robots, create media type mappings for the robot as explained in step 2 under "Changing Update Options" on page 460

   You can change the default media type mappings as explained in "Adding Mapping Entries to vm.conf" on page 203.

7. Ensure that the appropriate control daemons are active on the robot control host.

8. On the main menu, choose a for Add Volumes.

9. Respond to the prompt with a, to use auto-populate.

   This brings up a robot selection prompt for selecting the robot where you added the media.

   The remaining steps are the same as for a robot inventory and update operation. Go to step 8 under "Inventory and Update Robot Volume Configuration" on page 456.

Adding a Single Volume to a Robot (Without Auto-Populate)

The following procedure explains how to add a single volume to a robot using the s option, rather than using Auto-Populate.

Note The first seven steps of this procedure are the same as adding a standalone volume (see "Adding a Single Standalone Volume" on page 418) and are only summarized here. Refer to that procedure for details.

▼ To add a volume

1. On the main menu, choose a for Add Volumes.

2. Respond to the prompt with s, to add a single volume.

3. Enter the number for the type of media you want to add.

   If you selected a cleaning tape, enter the number of cleanings you want available.

4. Enter a single media ID for tape or two media IDs for an optical disk. A Media Manager media ID can contain from 1 to 6 characters.

Note Media IDs for API robots must always match the barcodes. This means that you must get a list of the barcode labels prior to adding the volumes to Media Manager. You can obtain this information from the interface that is provided by the robot vendor or operating system, or you can use one of the robotic inventory options on the Special Actions menu.

5. Enter a media description (1 to 25 characters).

6. Select a volume pool.

7. Specify that you want the volume added to a robot. You are prompted to enter the physical location of the volume using a menu of possible locations, similar to the following menu for an 8mm cartridge tape:

```
Physical Location
-----------------
1)  Not in robotic device
2)  RSM - Removable Storage Manager
3)  TL8 - Tape Library 8MM
4)  TLD - Tape Library DLT
5)  TLM - Tape Library Multimedia
6)  TS8 - Tape Stacker 8MM
Enter Choice [1-6]:
```

   Enter the number of the type of device to which you want to add a volume. If a device of the specified type does not currently exist, step 9 occurs immediately.

8. The devices of the selected type that currently have volumes in the database are displayed, along with the option to specify a new one, similar to the following. Enter the number of the robot you want to add to, or n to specify a new robot.

```
Applicable Robot List
---------------------
22)  TL8 - Tape Library 8MM  (bobcat)
n)   New Robot Number
Enter Choice:
```

9. If you enter n or the robot you chose does not exist, you are prompted for a new, unique robot number (which must match the number that will be used when you configure the robot or was used when you configured the robot), and the new robot control host (where the robotics are controlled). Otherwise, the next step occurs.

   The following point applies only to NetBackup Enterprise Server.

   No robot control host name is requested for an ACS or TLM robot.

10. You are prompted for specific information about the volume and where it should go. This information varies depending on the type of robot to which the volume is being added.

- If the robot is an API robot, you do not enter slot information. Media Manager does not require slot location for those robot types because this information is tracked by the robot vendor software.
- If the robot is not an API robot, you are prompted to enter the slot number.

11. You are prompted to enter the volume group by a menu similar to the following. You may choose from any existing volume groups on the device.

```
Volume Group
------------
1)  tl8grp1
2)  Specify New Volume Group Name
3)  Auto-Generate New Volume Group Name
Enter choice:
```

12. For some robots, you are asked whether the volume should be injected using the media access port. For an ODL robot, you are asked whether the platters should be formatted.

Note The inject prompt occurs for robot types that support media access ports. This prompt may appear for some robots that do not have these ports, since the Media Manager robot type for the robot only indicates that media access ports are possible.

13. A reminder to insert the volume in the media access port or into the specified slot of the robot is displayed, and you are then returned to the main menu.

If you do not insert the volume now, it is still added to the database and logically associated with the robot.

If the robot is not an API robot and it has a barcode reader, the barcode is read and added to the database when you add the volume, provided you also physically insert the volume in the proper slot.

If you insert the volume later, then you must use Update / Validate Barcodes for Volumes on the Special Actions menu at that time (see "Updating Barcodes for Selected Volumes in a Robot" on page 451).

Adding a Range of Volumes to a Robot (Without Auto-Populate)

The following procedure explains how to add a range of volumes to a robot by using the r option, rather than Auto-Populate.

Note The first six steps of this procedure are the same as adding a standalone volume (see "Adding a Range of Standalone Volumes" on page 421) and are only summarized here. Refer to that procedure for details.

▼ To add a range of volumes

1. On the main menu, choose a for Add Volumes.
2. Respond to the prompt with r, to add a range of volumes.
3. Enter the number for the type of media you want to add.
4. If you selected a range of cleaning tapes, enter a single number that indicates the number of cleanings you want available on each volume in the range.
5. Enter a description (1 to 25 characters) that applies to all media in the range.
6. Select a volume pool.
7. Specify that you want to add the volumes to a robot. You are prompted for the physical location of the volumes using a menu of possible locations, similar to the following menu for an 8 mm cartridge tape:

```
Physical Location
-----------------
1)  Not in robotic device
2)  RSM - Removable Storage Manager
3)  TL8 - Tape Library 8MM
4)  TLD - Tape Library DLT
5)  TLM - Tape Library Multimedia
6)  TS8 - Tape Stacker 8MM
 Enter Choice [1-6]:
```

Enter the number of the type of robot to which you want to add the volumes. (If a device of the specified type does not currently exist, step 8 is skipped and step 9 occurs.)

8. The devices of the selected type that currently exist in the database are displayed, along with the option to specify a new robot, similar to the following. Enter the number of the robot you want to add to, or n to specify a new robot.

```
Applicable Robot List
---------------------
22) TL8 - Tape Library 8MM  (bobcat)
n)  New Robot Number
Enter Choice:
```

9. If you enter n or the robot you chose does not exist, you are prompted for a new, unique robot number and a new control host. Otherwise, the next step occurs.

   The following point applies only to NetBackup Enterprise Server.

   No robot control host name is requested for an ACS or TLM robot.

10. You are prompted to enter the volume group, by a menu similar to the following. You may choose from any existing volume groups on the device.

```
Volume Group
------------
1)  tl8grp1
2)  Specify New Volume Group Name
3)  Auto-Generate New Volume Group Name
Enter choice:
```

11. You are prompted for specific information about the volume and where it should go. This information varies depending on the type of robot to which the volume is being added.

    If the robot is an API robot, you do not enter slot information. Media Manager does not require slot location for those robot types, because this information is tracked by the robot vendor software.

    If the robot is not an API robot, you are prompted to enter the slot number for the volume.

12. At this point, the procedure is similar to adding a standalone volume. You are prompted to enter the media ID naming mode with a menu displaying the possible modes.

Note Media IDs for API robots must always match the barcodes. This means that you must get a list of the barcode labels prior to adding the volumes to Media Manager. You can obtain this information from the interface that is provided by the robot vendor or operating system, or you can use one of the robotic inventory options on the Special Actions menu.

If you selected an optical disk media type, the following display appears. If you selected any device other than an optical disk media type, only options a through e are displayed.

```
Media ID Naming Mode
--------------------
a)  0 characters and 6 digits
b)  1 character  and 5 digits
c)  2 characters and 4 digits
d)  3 characters and 3 digits
e)  4 characters and 2 digits
f)  0 characters, 5 digits, and 1 character platter-side
g)  1 character,  4 digits, and 1 character platter-side
h)  2 characters, 3 digits, and 1 character platter-side
i)  3 characters, 2 digits, and 1 character platter-side
j)  4 characters, 1 digit,  and 1 character platter-side
Enter Choice:
```

Enter the desired naming mode. When the volumes are added, the digit field is incremented by one for each volume. Only numbers are incremented.

13. For all devices other than an API robot, you are prompted for the media ID of the first volume. The prompt is appropriate for the media type and is similar to one of the following prompts (*xxx* is the slot number you entered in step 11):

```
Enter Media ID for slot xxx, side A -- using naming mode e:
Enter Media ID for slot xxx -- using naming mode a:
Enter 3 Character Prefix for ALL Media IDs:
```

If you had selected naming mode e and entered the ID, tape01, the media ID of the first volume added would be TAPE01, the second TAPE02, and so on.

14. You are prompted for the number of volumes to add.

a. If you selected an optical disk media type, the prompt is as follows, where x and y represent the range of platters available.

```
Enter Number of Platters (2 Volumes/Platter) in Range [x-y]:
```

For example, entering 4 causes eight volumes (four platters) to be added.

You are then given the option to format the platters being added using `tpformat`. Choosing n (no) adds the volumes immediately and you are returned to the main menu.

b. If you selected a media type other than optical disk, the prompt is as follows, where x and y represent the range of volumes available. A range is not presented if the robot is an API robot.

```
Enter Number of Volumes in Range [x-y]:
```

15. The volumes are added to the database and you are returned to the main menu.

    If any volume cannot be added (for example, if the range you specified overlaps with existing volumes), the operation aborts, but volumes added before the failure remain in the database.

    If you do not insert the volume now, it is still added to the database and logically associated with the robot.

    If the robot is not an API robot and it has a barcode reader, the barcode is read and added to the database when you add the volume, providing you also physically insert the volume in the proper slot. If you insert the volume later, then you must use Update/Validate Barcodes for Volumes on the Special Actions menu at that time (see "Updating Barcodes for Selected Volumes in a Robot" on page 451).

Displaying the Volume Configuration

▼ To display a volume configuration

1. On the `vmadm` menu, choose p for Print Information about Volumes. The current print criteria are displayed along with a menu which allows you to change the criteria, similar to the following example:

```
      Display Filter:  ALL
        Display Mode:  BRIEF
Output Destination:  SCREEN

Display Options
---------------
s)  Search
m)  Mode (brief or full)
o)  Output Destination (screen or file)
f)  Filter
h)  Help
q)  Quit Menu
ENTER CHOICE:
```

2. To accept the current settings, select s for Search. With the settings shown above in the example, you would receive brief information about all volumes on your screen.

3. To change the print criteria, select one of the following options:

m — Toggles the display mode.
FULL mode displays the most extensive information about each selected volume.
BRIEF mode displays a subset, one line of information about each selected volume. In this mode, volumes are listed in alphabetical order by media ID. The default mode is BRIEF.

o — Toggles the output destination between the screen and a file of your choice. When you switch from the screen setting to a file, you are prompted for the file name. You must enter an absolute path or the enter key for the default file `/tmp/vmadm_output`.

f — Changes the display filter that determines which volumes are displayed. The following options are shown:

1) ALL
2) MEDIA ID
3) MEDIA TYPE
4) VOLUME GROUP
5) ROBOT NUMBER
6) ROBOT TYPE
7) VOLUME POOL
8) VAULT CONTAINER ID

For entries 2 through 8, you are prompted to enter the appropriate value. Menus of the possibilities are provided for entries 3 through 7. For entry 8, the dash character clears the Vault container ID. The default is the last value chosen and is always shown in parentheses following the prompt. Initially, information about all volumes is shown.

After you change a print option, you must select s for the information to be printed or displayed. If you choose to copy the information to a file, you receive a message after you select s that output is written to the file. `vmadm` uses the `more` utility to display information on the screen.

The amount of information displayed depends on the mode that you specify. FULL mode displays all available information about the selected volumes in a format similar to the following example for a single volume:

```
media ID:                   MIN028
media type:                 8MM cartridge tape (4)
barcode:                    00000018
media description:          configured by GJK
volume pool:                POOL2 (7)
```

```
robot type:                 TL8 - Tape Library 8MM (6)
robot number:               0
robot slot:                 28 (C08)
robot control host:         hare
volume group:               TL8-0
vault name:                 V1
vault sent date:            Wed Dec 02 09:34:01 1993
vault return date:          Tue Feb 17 09:34:01 1994
vault slot:                 546
vault session id:           37
vault container id:         offsite32
created:                    Mon Nov 29 08:39:09 1993
assigned:                   Tue Nov 30 20:51:28 1993
last mounted:               Sun Dec  5 20:51:49 1993
first mount:                Tue Nov 30 20:54:00 1993
expiration date:            ---
number of mounts:           6
max mounts allowed:         ---
status:                     0x0
```

For a standalone volume, fields that do not apply (for example, robot type, robot number, and so on) are not included in the FULL mode display.

For a cleaning tape, number of mounts is replaced by cleanings left.

The status field is not displayed unless the media is assigned.

BRIEF mode displays a subset of the most pertinent information, showing one line per volume, by default in alphabetical order by media ID, similar to the following example:

```
media   media   robot  robot  robot  side/  optical  # mounts/      last
 ID     type    type     #    slot   face   partner  cleanings   mount time
-----------------------------------------------------------------------
000001  DLT     TLD      1      1     -       -      17     06/03/1996 00:01
000002  DLT     TLD      1     12     -       -      14     06/03/1996 00:02
000022  DLT     TLD      0      7     -       -       1     04/18/1996 09:25
```

Even when the same kind of information is returned, such as media type and robot type, the FULL display expands the description and is more complete. With an optical disk, for example, BRIEF mode shows a media type of REWR_O while FULL mode shows Rewritable optical disk.

Moving Volumes

When you move volumes in or out of a robot, or from one robot to another, you must physically and logically move the volume. The physical part of the move is when you remove or insert the volume. The logical move changes the volume database to show the volume at the new location.

You can perform the following types of logical moves:

- Move single volumes
- Move multiple volumes
- Move volume groups

Common instances where you use the move options are:

- Replacing full volumes in a robot. When a robotic volume is full and there are no more empty slots in the robot, you move the full volume to standalone, and then configure a volume for the empty slot or move a volume into that slot. You could use a similar process to replace a defective volume.
- Moving volumes from a robot to an offsite location or from an offsite location into a robot. When you move tapes to an offsite location you move them to standalone.
- Moving volumes from one robot to another (for example, if a robot is down).

Moving Volumes (With Inventory and Update)

Inventory a Robot and Update Volume Configuration on the Special Actions menu provides the easiest way to logically move media when the following are true:

- The move involves a robot that supports barcodes, see “Robot Attributes” on page 305.
- The media has readable barcodes.

See “Inventory and Update Robot Volume Configuration” on page 456 for instructions on using this option.

If the robot does not support barcodes or the barcodes are unreadable, use one of the following:

- The move procedures explained in the following topics.
- The physical inventory utility (see “Using the Physical Inventory Utility for Non-Barcoded Media” on page 348).

Moving a Single Volume (Without Inventory and Update)

Moving a volume in `vmadm` changes only its logical residence in the volume database. It must also be moved physically, unless it is injected or ejected using the media access port.

When you move a volume to a non-API robot that has a barcode reader, Media Manager performs a Validate and Update Barcode operation on that volume.

▼ To move a volume

1. On the main menu, choose m for Move Volumes.

2. The following prompt is displayed. Enter s to move a single volume.

```
Move Single Volume, Multiple Volumes, or Volume Group? (s/m/v):
```

3. You are prompted for the media ID of the volume you want to move.

```
Changing Volume Residence
-------------------------
Enter Media ID:
```

4. The current residence of the volume is displayed, along with the possible locations to which it could be moved, similar to the following example:

```
Current Residence of 000003:
robot type:         TL8 - Tape Library 8MM  (6)
robot number:       10
robot control host: dill
volume group:       Sca1000
robot slot:         4
barcode:            000003

New Residence:

Physical Location
-----------------
1)  Not in robotic device
2)  RSM - Removable Storage Manager
3)  TL8 - Tape Library 8MM
4)  TLD - Tape Library DLT
5)  TLM - Tape Library Multimedia
6)  TS8 - Tape Stacker 8MM
Enter Choice [1-6]: (3)
```

5. Enter the new residence for the volume.

a. If you move a volume out of an ODL, TSH, TLD, or TL8 robot to a standalone location, you are asked whether the volume should be ejected using the media access port. This is the final step in the procedure.

Note This prompt occurs for robot types that support media access ports (and if `vmadm` supports the eject operation for the robot type). This prompt may be shown for some robots that do not have this support, since the robot type for the robot only indicates that media access ports are possible.

---

b. If you choose to move a volume into a robot, you are prompted with a menu of possible robots, similar to the following.

Enter the number of the appropriate robot. If you choose n, you are prompted to enter a new robot number and robot control host.

```
Applicable Robot List
---------------------
10) TL8 - Tape Library 8MM (dill)
20) TL8 - Tape Library 8MM (dill)
n)  New Robot Number
Enter choice:
```

c. You are prompted for specific information about where the volume should be moved. This information varies depending on the device to which the volumes are being moved.

- If the robot is an API robot, see step 6.
- If the robot is not an API robot, you are prompted for the tape slot where the volume should be moved.

6. You are prompted to enter the volume group. You may do any of the following actions:

- Choose from any volume groups in the list.
- Elect not to associate the volume with any volume group (if the option is offered).
- Enter a new name of your own choice.
- Have a name generated by `vmadm`, if the name of volume group is not important in this case.

```
Volume Group
------------
1)  tl8grp1
2)  No Volume Group
3)  Specify New Volume Group Name
4)  Auto-Generate New Volume Group Name
```

```
Enter choice:
```

7. If you move a volume from or to robots that support media access ports (and `vmadm` supports that robot with eject or inject), you are asked whether the volume should be ejected and then injected using the media access port.

Moving Multiple Volumes

Moving multiple volumes is similar to moving single volumes, except that once you choose where you want the volumes to be moved, you are prompted to continue entering media IDs of volumes to move. You also do not have the option to eject and inject volumes using the media access port.

Moving volumes in `vmadm` changes only their logical residence in the volume database. They must also be moved physically. When you move volumes to a non-API robot that has a barcode reader, Media Manager performs a Validate / Update Barcode operation on those volumes.

▼ To move multiple volumes

1. On the main menu, choose m for Move Volumes.

2. The following prompt is displayed. Enter m to move multiple volumes:

```
Move Single Volume, Multiple Volumes, or Volume Group? (s/m/v):
```

3. You are prompted for the media ID of the first volume you want to move:

```
Moving Volumes
--------------
Enter First Media ID:
```

4. If you are moving a volume on an optical disk, you are reminded that moving the volume on one side of the platter also moves the volume on the other side.

   The current residence of the volume is displayed, along with the possible locations to which it could be moved, similar to the following menu. Enter the new residence for the volumes.

```
Current Residence for all volumes in list:
robot type:         TL8 - Tape Library 8MM  (6)
robot number:       10
robot control host: dill
volume group:       Sca1000
robot slot:         3
barcode:            000002
```

```
New Residence for all volumes in list:

Physical Location
-----------------
1)  Not in robotic device
2)  RSM - Removable Storage Manager
3)  TL8 - Tape Library 8MM
4)  TLD - Tape Library DLT
5)  TLM - Tape Library Multimedia
6)  TS8 - Tape Stacker 8MM
Enter Choice [1-6]: (3)
```

5. If you move the volumes into a robot, you are prompted with a menu of possible libraries, similar to the following. Enter the number of the appropriate robot. If you choose n, you are prompted to enter a new robot number and a new robot control host.

```
Applicable Robot List
---------------------
10) TL8 - Tape Library 8MM (dill)
20) TL8 - Tape Library 8MM (dill)
n)  New Robot Number
Enter choice:
```

6. You are prompted to enter the volume group.You may do any of the following actions:

   - Choose from any volume groups in the list.
   - Elect not to associate the volume with any volume group (if the option is offered).
   - Enter a new name of your own choice.
   - Have a name generated by `vmadm`, if the name of volume group is not important in this case.

```
Volume Group
------------
1)  tl8grp1
2)  No Volume Group
3)  Specify New Volume Group Name
4)  Auto-Generate New Volume Group Name
Enter choice:
```

7. Depending on the device, you are prompted for a media ID or to specify location information for each volume.

Note You do not enter slot information for media added to an API robot. Media Manager does not require slot location for these robot types, since this information is tracked by the operating system or the robot vendor software.

8. At this point, the volumes are moved, messages confirming the moves are displayed, and you are returned to the main menu.

Moving a Volume Group

A volume group can be moved to a new robot or made standalone. All volumes must have their new slot numbers identified, as the move operation leaves slot numbers unmodified.

Moving volumes in `vmadm` changes only their logical residence in the volume database. They must also be moved physically.

See "Volume Pools and Volume Groups" on page 337, for a definition of a volume group.

Note If a volume group is moved back into a robot, every volume must be returned to its original slot.

▼ To move a volume group

1. On the main menu, choose m for Move Volumes.

2. The following prompt is displayed. Enter v to move a volume group.

```
Move Single Volume, Multiple Volumes, or Volume Group? (s/m/v):
```

3. A menu of possible groups is displayed, similar to the following menu. Enter the number of the volume group you want to move.

```
Volume Group
------------
1)  00_025_TL8
2)  10i-1
3)  10i-2
4)  axc
Enter choice:
```

4. The current residence of the volume group is displayed, along with a prompt to choose the new location, similar to the following:

```
Current Residence for Volume Group 00_025_TL8:
----------------------------------------------
```

```
robot type:         TL8 - Tape Library 8MM  (3)
robot number:       25
robot control host: bobcat

New Residence:

Physical Location
-----------------
1)  Not in robotic device
Enter Choice [1-1]: (1)
```

You can move a volume group only between a robotic location and standalone. To move a group from one robot to another, you must move the group to standalone, as an intermediate step, and then to the new robot.

5. If you selected a standalone volume group to move, the physical locations listed would not offer option (1), but would show the robot type to which the volumes could be moved, as in the following sample menu:

```
New Residence:
Physical Location
-----------------
1)  RSM - Removable Storage Manager
2)  TL8 - Tape Library 8MM
3)  TLD - Tape Library DLT
4)  TLM - Tape Library Multimedia
5)  TS8 - Tape Stacker 8MM
Enter Choice [1-5]:
```

Enter the new residence for the volume group. The volumes are logically moved and you are returned to the main menu.

Deleting a Single Volume

The volume is deleted from the Media Manager database, not physically from the device.

Note You cannot delete volumes that are assigned until they are unassigned. Only NetBackup and Storage Migrator use the assigned state. See "Deassigning Volumes" on page 153 for more information.

▼ To delete a volume

1. On the main menu, choose d for Delete Volumes.

2. The following prompt appears. Enter s to delete a single volume.

```
Delete Single Volume, Multiple Volumes, or Volume Group? (s/m/v):
```

3. You are then prompted for the media ID of the volume you want to delete:

```
Deleting Volume
---------------
Enter Media ID:
```

4. If you are deleting an optical disk volume, you get the following additional warning and prompt (*xxxxx*A and *xxxxx*B represent the media IDs of sides A and B of the volume's platter). Entering n cancels the operation. Entering y continues the operation.

```
Deleting volume xxxxxA will also delete xxxxxB
are you sure you want to delete both volumes? (y/n):
```

5. The deletion is confirmed with a message, and you are returned to the main menu.

Deleting Multiple Volumes

The volumes are deleted from the Media Manager database, not physically from the device.

Note You cannot delete volumes that are assigned until they are unassigned. Only NetBackup and Storage Migrator use the assigned state. See "Deassigning Volumes" on page 153 for more information.

▼ To delete multiple volumes

1. On the main menu, choose d for Delete Volumes.

2. The following prompt appears. Enter m to delete multiple volumes.

```
Delete Single Volume, Multiple Volumes, or Volume Group? (s/m/v):
```

3. You are prompted for the media ID of the volume you want to delete:

```
Deleting Volumes
----------------
Enter Media ID:
```

4. If you are deleting an optical disk volume, you get the following additional warning (*xxxxx*A and *xxxxx*B represent the media IDs of sides A and B of the volume's platter).

```
Deleting volume xxxxxA will also delete xxxxxB
```

5. Pressing the Escape key cancels the operation. Continuing causes the volume to be deleted, when all the desired volumes have been entered. You continue to be prompted for media IDs until you press only the Enter key.

   The volumes are deleted, messages confirm each deletion, and you are returned to the main menu.

Deleting a Volume Group

The volume is deleted from the Media Manager database, not physically from the device.

Note You cannot delete volumes that are assigned until they are unassigned. Only NetBackup and Storage Migrator use the assigned state. See "Deassigning Volumes" on page 153 for more information.

▼ To delete a volume group

1. On the main menu, choose d for Delete Volumes.

2. The following prompt appears. Enter v to delete a volume group.

```
Delete Single Volume, Multiple Volumes, or Volume Group? (s/m/v):
```

3. A menu of the possible volume groups is displayed, similar to the following. Enter the number of the volume group you want to delete.

```
Volume Group
------------
1)  00_025_TL8
2)  10i-1
3)  10i-2
4)  cc
Enter choice:
```

4. The volumes in the specified group are deleted and you are returned to the main menu.

Changing a Volume's Description

▼ **To change a description for a volume**

1. On the main menu, choose s for Special Actions.
2. Choose d for Change Media Description for Volume.
3. The following prompt appears. Enter the media ID of the volume whose description you want to change.

```
Changing Media Description for Volume
-------------------------------------
Enter Media ID:
```

4. The current media description and a prompt for the new description is displayed. Enter the new description and press Enter. You are returned to the Special Actions menu.

```
Current Media Description for 000000: test
Enter Media Description (25 char max):
```

Changing a Volume's Volume Pool

Volumes are in a specific volume pool or are associated with a generic volume pool. The volume pool row in the Print Information about Volumes FULL display mode, shows the name of the volume pool to which the volumes belong (if any).

Once associated with a pool, volumes are assigned or unassigned. Only the NetBackup and Storage Migrator applications use the assigned state. A NetBackup or Storage Migrator volume becomes assigned when it is requested by a user or an application. The time of the assignment appears in the assigned row in the Print Information about Volumes FULL display mode.

A volume must be in an unassigned state before you can change its volume pool. Attempting to change its volume pool while the volume is assigned results in an error.

Changing the volume pool for an optical disk volume also changes the volume pool for its partner volume.

▼ To change a volume pool for a volume

1. Unassign the volume if it is assigned to NetBackup (See "Deassigning Volumes" on page 153 for more information).

2. On the main menu, choose s for Special Actions.

3. Choose p for Change Volume Pool for Volumes. The list of defined volume pools appears. You can do any of the following actions:

   - Enter 1, if you want the volume associated with the generic volume pool; the volume will be available to any user or application.
   - Enter 2 if you want the volume to be available only to NetBackup.
   - Enter another choice to have the volume associated with one of the volume pools listed.

```
Changing Volume Pool for Volumes
--------------------------------
Volume Pool
----------
1)  None
2)  NetBackup
3)  oldplatters
4)  newplatters
5)  POOL1
6)  DataStore
Enter Choice:
```

4. You are prompted for the media ID of the volume to change. You will continue to be prompted for media IDs until you press the Enter key without typing a media ID.

Changing the Expiration Date for Volumes

The administrator can change the expiration date for any volume in the volume database. The expiration date refers to the age of the media (not the data on the media) and is the time at which the media is considered too old to be reliable.

When its expiration date has passed a volume can still be read, but it will not be mounted for a write access. Requesting write access to a volume whose expiration date has passed results in an error; requesting read access results in a warning being logged to the system console log.

You can set or change an expiration date for a single volume or for multiple volumes.

▼ To change the expiration date for a volume

1. On the main menu, choose s for Special Actions.
2. Choose e for Change Expiration Date for Volumes.
3. At the prompt, enter 0 for no expiration date or enter a date in one of the following formats:
   - mm/dd/yy hh/mm/ss
   - mm/dd/yyyy hh/mm/ss
   - mm/dd/yy
   - mm/dd/yyyy
   - mm/dd
4. You are then prompted to enter the media ID of the volume to associate with this expiration date. You will continue to be prompted for media IDs until you press the Enter key without typing a media ID.

Changing the Volume Group for Volumes

▼ To change a volume group for a volume

1. On the main menu, choose s for Special Actions.
2. Choose g for Change Volume Group for Volumes. The following prompt appears:

   ```
   Changing Volume Group for Volumes
   ---------------------------------
   Enter Media ID:
   ```

   Enter the media ID of the first volume you want to change and press Enter. You will continue to be prompted for media IDs until you press the Enter key without typing a media ID.

   As you enter the media IDs, Media Manager validates them to ensure they have common media types and residences.
3. When you exit from this prompt, a list similar to the following appears. The list will include existing volume groups that are valid for the media you specified in step 2, (00_000_TL8 is the volume group in this example), and also have options for specifying a new volume group name or having `vmadm` generate a new name.

```
Volume Group
--------------
1) 00_000_TL8
2) Specify New Volume Group Name
3) Auto-Generate New Volume Group Name
Enter Choice:
```

If you choose to specify a new volume group name, a prompt appears allowing you to enter the name.

Change Vault Name for Volumes

You can set, clear, or change the vault name that contains the volume. This field is used by NetBackup Vault to determine what offsite location the volume is located in while off site.

You can change the vault name for a single volume or for multiple volumes.

▼ To change the vault name

1. On the main menu, choose s for Special Actions.
2. Choose a for Change Vault Parameters for Volumes.
3. Choose n for Change Vault Name for Volumes. The following prompt appears. Enter the new vault name. Entering a hyphen means that the name will be cleared.

```
Changing Vault Name for Volumes
--------------------------------
(enter '-' to clear vault name)
Enter Vault Name(25 chars max):
```

4. You are prompted for the media IDs for which you want this vault name applied.

   You will continue to be prompted for media IDs until you press the Enter key without typing a media ID. If you enter the ESC key, your changes will not be applied.

Change Date Volumes are Sent to Vault

You can set, clear, or change the date a volume is sent to the vault. This field is used by NetBackup Vault to record when a volume was sent to an offsite vault.

You can change the date for a single volume or for multiple volumes.

▼ **To change the date**

1. On the main menu, choose s for Special Actions.
2. Choose a for Change Vault Parameters for Volumes.
3. Choose s for Change Date Volumes are sent to Vault. The following prompt appears. Enter the new date the volume is sent off site. Entering 0 means that the date will be cleared.

```
Changing Date Volume(s) Sent to Vault
---------------------------------
(vault sent date of 0 means clear entry)
Enter date volumes(s) sent to vault:
```

4. You are prompted for the media IDs for which you want this date applied.

   You will continue to be prompted for media IDs until you press the Enter key without typing a media ID. If you enter the ESC key, your changes will not be applied.

Change Date Volumes Return from Vault

You can set, clear, or change the date a volume returns from the vault. This field is used by NetBackup Vault to record when a volume is requested to be returned from the vault.

You can change the date for a single volume or for multiple volumes.

▼ **To change the date**

1. On the main menu, choose s for Special Actions.
2. Choose a for Change Vault Parameters for Volumes.
3. Choose r for Change Date Volumes return from Vault. The following prompt appears. Enter the new date. Entering 0 means that the date will be cleared.

```
Changing Date Volume(s) return from Vault
---------------------------------
vault return date of 0 means clear entry)
Enter date volume(s) return from vault):
```

4. You are prompted for the media IDs for which you want this date applied.

   You will continue to be prompted for media IDs until you press the Enter key without typing a media ID. If you enter the ESC key, your changes will not be applied.

Change Vault Slot for Volumes

You can set, clear, or change the slot that the volume is contained in at the vault. This field is used by NetBackup Vault to determine what slot the volume is located in while in the vault.

You can change the slot for a single volume or for multiple volumes.

▼ To change the slot

1. On the main menu, choose s for Special Actions.
2. Choose a for Change Vault Parameters for Volumes.
3. Choose s for Change Vault Slot for Volumes. The following prompt appears. Enter the new vault slot. Entering 0 means that the slot will be cleared.

```
Setting Vault Slot for Volumes
------------------------------
Enter Vault Slot: (0)
```

4. You are prompted for the media IDs for which you want this slot applied.

   You will continue to be prompted for media IDs until you press the Enter key without typing a media ID. If you enter the ESC key, your changes will not be applied.

Change Vault Session ID for Volumes

You can set, clear, or change the vault session ID that a volume was processed in. This field is used by NetBackup Vault to determine what session was used for a volume when it was vaulted.

You can change the vault session ID for a single volume or for multiple volumes.

▼ To change the session ID

1. On the main menu, choose s for Special Actions.
2. Choose a for Change Vault Parameters for Volumes.
3. Choose i for Change Vault Session ID for Volumes. The following prompt appears. Enter the new session ID. Entering 0 means that the session ID will be cleared.

```
Setting Vault Session ID for Volumes
------------------------------------
Enter Vault Session ID: (0)
```

4. You are prompted for the media IDs for which you want this session ID applied.

   You will continue to be prompted for media IDs until you press the Enter key without typing a media ID. If you enter the ESC key, your changes will not be applied.

Setting the Maximum Mounts for Volumes

You can set or change the maximum number of times a volume can be mounted. Once this number is reached, any further requests to mount the volume for a write operation result in an error. Specifying a maximum allowed mount count of 0 means there is no limit on the number of times a volume can be mounted.

To help determine the maximum mount count to use, consult your vendor documentation for information on the expected life of the media.

You can set the maximum allowed mounts for a single volume or for multiple volumes.

Note You cannot set the maximum number of mounts for a cleaning cartridge.

▼ **To set the maximum mounts**

1. On the main menu, choose s for Special Actions.

2. Choose s for Set Maximum Allowed Mounts for Volumes.

3. A prompt is displayed for specifying a maximum mount count. Entering a zero means there is no limit to the number of times the volume can be mounted.

4. You are prompted for the media IDs for which you want this maximum allowed mounts applied.

   You will continue to be prompted for media IDs until you press the Enter key without typing a media ID.

Changing the Cleanings Allowed for a Cleaning Tape

When you added cleaning tapes, you specified a cleaning count. For more information about cleaning tapes, see `tpclean(1M)` in the NetBackup commands for UNIX reference guide.

▼ **To adjust the cleaning count**

1. On the main menu, choose s for Special Actions.

2. Choose m for Modify Number of Cleanings on Cleaning Cartridge.

3. The following prompt appears. Enter the media ID of the cleaning tape for which you want to change the cleaning count.

```
Changing Cleaning Count for Volume
----------------------------------
Enter Media ID:
```

4. The current number of cleanings and a prompt to enter a new number for the cleaning count is displayed, similar to the following. Enter a new number. The cleaning count is changed to the new number and you are returned to the Special Actions menu.

```
Current Number of Cleanings for TEST:26
Enter New Number of Cleanings:
```

Updating Barcodes for Selected Volumes in a Robot

Use Update/Validate Barcode for Volumes on the Special Actions menu to check the barcodes of selected volumes in robots (that can read barcodes) and update the volume database if necessary. "Robot Attributes" on page 305 lists the robots that support barcodes.

Use this menu option only to fill in barcodes that are missing from the database. For example, if you logically add a new volume but do not physically insert it into the robot, the database will not include the barcode. In this case, you can use the Update/Validate Barcode option to fill in the missing barcode.

Do not use this option to correct a database entry that shows an incorrect media ID in a slot. Here, you must update the database by using a move option (see "Moving Volumes" on page 435) or the inventory and update option (see "Inventory and Update Robot Volume Configuration" on page 456).

Note You cannot use the Update/Validate Barcodes option for API robots since Media Manager does not manage location information for media in these robot types.

▼ To update barcodes

1. Ensure that the appropriate robotic daemons are active on the robot control host. To start the daemons, see "Robotic Daemons" on page 257.

2. On the main menu, choose s for Special Actions.

3. Choose u for Update / Validate Barcode for Volumes. The following prompt appears:

```
Validating/Updating Barcodes for Volumes
----------------------------------------
Enter Media ID:
```

4. Enter the media ID of the first volume you want to update and press the Enter key. You will continue to be prompted for media IDs until you press the Enter key without entering a media ID.

   When you press the Enter key to exit from the Enter Media ID prompt, the barcodes are updated and you are returned to the Special Actions menu.

Inventory and Report Robot Volume Configuration

Use Inventory a Robot and Report Contents from the Special Actions menu, to inventory a selected robot and obtain a report that shows which media ID is in each slot. If the robot can read barcodes (see "Robot Attributes" on page 305) then barcode information is included in the report.

Note If a volume happens to be in a drive, the report shows it in the slot it came from.

This option does not check or change the database, but is useful for listing the contents of a robot.

1. Ensure that the appropriate robotic daemons are active on the robot control host. To start the daemons, see "Robotic Daemons" on page 257.

2. On the main menu, choose s for Special Actions.

3. Choose c for Inventory a Robot and Report Contents.

   If the volume database has entries for robotic volumes, `vmadm` lists the robot number, robot type, and robot control host for those robot types. For example:

```
Robot from Volume Configuration
-------------------------------
1)  TLD 2 -- breaker
2)  TL4 3 -- breaker
```

```
3)  TL8 0 -- whale
4)  none of the above
Enter choice:
```

a. If the desired robot is not in the list, choose (none of the above) and go to step 4.

b. If the desired robot is in the list, enter the number corresponding to the robot (for example, enter 3 for TL8 0 on whale) and go to step 5.

c. *The following step applies only to NetBackup Enterprise Server.*

If the desired robot is an ACS type, the menu shows a robot control host of NONE. If you choose an ACS robot, you are prompted for the Robot Control Host. At this prompt, enter the host on which the ACS daemon (`acsd`) is running. This can be the ACS library software host or it can be another host.

d. *The following step applies only to NetBackup Enterprise Server.*

If the desired robot is a TLM type, the menu shows a robot control host of NONE. If you choose a TLM robot, you are prompted for the Robot Control Host. At this prompt, enter the host on which the TLM daemon (`tlmd`) is running. This can be the TLM library software host or it can be another host.

If the volume database has no entries for robotic volumes, you are prompted to specify a robot control host on which to search the device configuration for robots. Respond to this prompt as explained in step 4.

```
Enter Robot Control Host:   (whale)
```

4. If the device configuration has no robots, or you have chosen an ACS or TLM robot or (none of the above) in step 3; you are prompted to select a robot control host on which to search the device configuration for robots.

```
Enter Robot Control Host:   (whale)
```

a. Enter a host name and then the Enter key, or press Enter without typing a name to select the default host shown in the parentheses. Media Manager searches for robots in the device configuration on the selected host.

Note If Media Manager does not find any robots in the device configuration, `vmadm` displays a “robot not obtained” message.

b. If Media Manager finds robots in the device configuration, it lists their robot number, robot type, and robot host. If a list appears but the desired robot is not shown, choose (none of the above). In this case, `vmadm` shows a “robot not obtained” message and you must configure the robot before you can perform the inventory and report.

To report the contents of a robot in the list, enter the number corresponding to the robot (for example, 1 for TLD 0 on shark) and go to step 5.

```
Robot from Device Configuration
-------------------------------
1)  TLD 0 -- shark
2)  TLD 1 -- shark
3)  none of the above
Enter choice:
```

5. When you have selected a robot, `vmadm` displays a report that shows the contents of the robot.

   For robots with a barcode reader, Media Manager obtains the barcode information and includes it in the report. If the robot does not support barcodes or the media does not have a readable barcode, <none> appears in place of the barcode.

Inventory and Compare Robot Volume Configuration

Use the Inventory a Robot and Compare with Volume Configuration on the Special Actions menu to physically inventory a robot, compare the results with the contents of the volume database, and obtain a list of recommended changes.

The report shows discrepancies between the contents of the robot and the contents of the volume database. If the robot can read barcodes, then barcode information is included in the report.

This option does not change the database, but is useful for verifying whether the volume database is correct after tapes have been physically moved in the robot. If the report shows that the media in a slot does not match what is in the database, you can physically move the media or change the database using a move option (see "Moving Volumes" on page 435) or the inventory and update option (see "Inventory and Update Robot Volume Configuration" on page 456).

▼ To inventory and compare a robot

1. Ensure that the appropriate control daemon is active on the host that controls the robot you are going to inventory. To start the daemons, see "Robotic Daemons" on page 257.

2. On the main menu, choose s for Special Actions.

3. Choose v for Inventory a Robot and Compare with Volume Configuration.

   If the volume database has entries for robotic volumes, `vmadm` lists the robot number, robot type, and robot host for those robots. For example:

```
Robot from Volume Configuration
-------------------------------
1)  TLD 2 -- breaker
2)  TL4 3 -- breaker
3)  TL8 0 -- whale
4)  none of the above
Enter choice:
```

a. If the desired robot is not in the list, choose (none of the above) and go to step 4.

b. *The following step applies only to NetBackup Enterprise Server.*

If the desired robot is an ACS type, the menu shows a robot control host of NONE. If you choose an ACS robot, you are prompted for the Robot Control Host. At this prompt, enter the host on which the ACS daemon (`acsd`) is running. This can be the ACS library software host or it can be another host.

c. *The following step applies only to NetBackup Enterprise Server.*

If the desired robot is a TLM type, the menu shows a robot control host of NONE. If you choose a TLM robot, you are prompted for the Robot Control Host. At this prompt, enter the host on which the TLM daemon (`tlmd`) is running. This can be the TLM library software host or it can be another host.

d. If the desired robot is in the list, enter the number corresponding to the robot (for example, enter 3 for TL8 0 on whale) and go to step 5.

e. If the volume database has no entries for robotic volumes, you are prompted to specify a robot control host on which to search the device configuration for robots. Respond to this prompt as explained in step 4.

```
Enter Robot Control Host:   (whale)
```

Note A robot does not appear in the list, if it does not have any volume entries in the volume database you are using for the compare.

4. If the volume database has no robotic volumes or you have chosen (none of the above) in step 3, you are prompted to select a robot control host on which to search the device configuration for robots.

```
Enter Robot Control Host:  (whale)
```

a. Enter a host name and then the Enter key, or press Enter without typing a name to select the default host shown in the parentheses. Media Manager searches for robots in the device configuration on the selected host.

Note If Media Manager does not find any robots in the device configuration, `vmadm` shows a "robot not obtained" message.

b. If Media Manager finds robots in the device configuration, it lists their robot number, robot type, and robot host. If a list appears but the desired robot is not shown, choose (none of the above). In this case, `vmadm` displays a "robot not obtained" message and you must configure the robot and insert media before you can perform the inventory and update.

   To inventory and compare the volume database entries for a robot in the list, enter the number corresponding to the robot (for example, 1 for TLD 0 on shark) and go to the next step.

```
Robot from Device Configuration
-------------------------------
1)  TLD 0 -- shark
2)  TLD 1 -- shark
3)  none of the above
Enter choice:
```

5. When you have selected a robot, `vmadm` displays a report comparing the contents of the robot with the contents of the volume database.

   See "Comparing Robot Contents with the Volume Configuration" on page 172 for example reports.

   For API robots, Media Manager determines whether the media ID and media type that is stored in its own database matches the database for the robot-vendor software.

   For robots that are not API robots that have a barcode reader, Media Manager determines whether the barcodes in the robot match those in the volume database. When the report shows <none>, it means that the media does not have a barcode.

   For robots that cannot read barcodes, `vmadm` verifies only whether the volume database correctly shows whether a slot contains media.

Inventory and Update Robot Volume Configuration

Use Inventory a Robot and Update Volume Configuration on the Special Actions menu to inventory a robot and compare the results with the contents of the volume database.

You can then optionally update the volume database to agree with what is in the robot. When you insert new media, the database update includes automatic creation of media IDs (based on barcodes or a prefix that you specify). If you use barcode rules, new media that is added through a barcode rule can also be assigned a media type, volume pool, maximum number of mounts (or number of cleanings), and description (see "Configuring Barcode Rules" on page 467).

See "Updating the Volume Configuration for a Robot" on page 174 for instructions on when to use and when not to use the Inventory and Update option.

To Inventory and Update Robot Volume Configuration

▼ To inventory and update a robot

1. Check the barcode capabilities of the robot and its media (optional).

   Before doing an inventory and update, perform "Inventory and Compare Robot Volume Configuration" on page 454 and check whether the following are true:

   - The robot supports barcodes.
   - The new media that was inserted has readable barcodes.

2. If the robotic library does *not* support barcodes or the volume does *not* have readable barcodes, you may want to save the results of the verify for reference, in case you assign a media ID prefix later in this procedure. You do not need a prefix if the robot supports barcodes and the media has a readable barcode.

   You also may want to consider using the physical inventory utility (see "Using the Physical Inventory Utility for Non-Barcoded Media" on page 348).

3. For API robots, create media type mappings for the robot as explained in step 2 under "Changing Update Options" on page 460.

   You can change the default media type mappings as explained in "Adding Mapping Entries to vm.conf" on page 203.

4. For robot types that are not API robots, create media ID generation rules (optional).

   See "Media ID Generation Tab (Advanced Options)" on page 197 for more information.

5. Create barcode rules (optional).

   Refer to "Configuring Barcode Rules" on page 467 and create any barcode rules that you want to use for updating the database for media that has been inserted into the robot.

6. Ensure that the appropriate control daemons are active on the robot control host. To start the daemons, see "Robotic Daemons" on page 257.

7. On the main menu, choose s for Special Actions.

8. Choose r for Inventory a Robot and Update Volume Configuration.

   If the volume database has entries for robotic volumes, `vmadm` lists the robot number, robot type, and robot host for those robots.

```
Robot from Volume Configuration
-------------------------------
1)  TLD 2 -- breaker
2)  TL4 3 -- breaker
3)  TL8 0 -- whale
4)  none of the above
Enter choice:
```

   a. If the robot you want to inventory and update is in the list, enter the number corresponding to the robot (for example, enter 3 for TL8 0 on whale) and go to step 10.

   b. If the desired robot is not in the list, choose (none of the above) and go to step 9.

   c. *The following step applies only to NetBackup Enterprise Server.*

      If the desired robot is an ACS type, the menu shows a robot control host of NONE. If you choose an ACS robot, you are prompted for the Robot Control Host. At this prompt, enter the host on which the ACS daemon (`acsd`) is running. This can be the ACS library software host or it can be another host.

   d. *The following step applies only to NetBackup Enterprise Server.*

      If the desired robot is a TLM type, the menu shows a robot control host of NONE. If you choose a TLM robot, you are prompted for the Robot Control Host. At this prompt, enter the host on which the TLM daemon (`tlmd`) is running. This can be the TLM library software host or it can be another host.

   e. If the volume database has no entries for robotic volumes, you are prompted to specify a robot control host on which to search the device configuration for robots. Respond to this prompt as explained in step 9.

```
Enter Robot Control Host:   (whale)
```

Note A robot does not appear in the list if it does not have any volume entries in the volume database you are updating. This will be the case if you configure a new robot and are adding media to it using the inventory and update option.

9. If the volume database has no robotic volumes or you have chosen (none of the above) in step 8, you are prompted to select a robot control host on which to search the device configuration for robots:

```
Enter Robot Control Host:   (whale)
```

a. Enter a host name and then the Enter key, or press Enter without typing a name to select the default host shown in the parentheses. Media Manager searches for robots in the device configuration on the selected host.

Note If Media Manager does not find any robots in the device configuration, `vmadm` shows a "robot not obtained" message.

b. If Media Manager finds robots in the device configuration, it lists their robot number, robot type, and robot host. If a list appears but the desired robot is not shown, choose (none of the above). In this case, `vmadm` shows a "robot not obtained" message and you must configure the robot and insert media before you can perform the inventory and update.

To inventory and update the volume database entries for a robot in the list, enter the number corresponding to the robot (for example, 0 for TLD 1 on shark) and go to step 10.

```
Robot from Device Configuration
-------------------------------
1)  TLD 0 -- shark
2)  TLD 1 -- shark
3)  none of the above
Enter choice:
```

10. When you have selected a robot, the Inventory and Update Robot menu appears. For example:

```
Inventory and Update Robot:  TLD (10) - whale

Update Mode:  INTERACTIVE

Inventory and Update
--------------------
u)  Inventory Robot and Update Volume Configuration

m)  Change Update Mode
o)  Change Update Options

h)  Help
q)  Quit Menu
```

```
ENTER CHOICE:
```

Inventory a robot and update its volume database entries as follows:

a. Use the m option to toggle the update mode.

- INTERACTIVE causes `vmadm` to display a list of recommended changes after the inventory, and prompts you to confirm whether to proceed with updating the database.
- NOT INTERACTIVE causes `vmadm` to make the recommended database changes without prompting for a confirmation.

  You may want to use the NOT INTERACTIVE mode after you become familiar with performing robot inventories.

b. To view the current inventory and update settings or change them, choose o and refer to "Changing Update Options" on page 460.

c. When the update options are as you want them, choose the u option to start the inventory and update operation.

See "Updating the Volume Configuration for a Robot" on page 174 for example reports.

Changing Update Options

When you choose o from the Inventory and Update Robot menu, the Update Options menu appears. The example that follows shows the defaults for a new installation.

These are also the defaults each time you enter the options menu, with the possible exception of the Media ID Prefix. The Media ID prefix default will be the last entry in the `vm.conf` file, if one exists (see step 6).

For most configurations, the default update options work well. You should only change the defaults if your configuration has special hardware or usage requirements.

```
Update Robot:  TL8 (10) - whale

OPTION FOR REMOVED MEDIA
------------------------
        Volume Group:  DEFAULT
OPTIONS FOR ADDED OR MOVED MEDIA
--------------------------------
        Volume Group:  DEFAULT
   Use Barcode Rules:  YES
          Media Type:  DEFAULT
```

```
    Media ID Prefix:  DEFAULT
        Volume Pool:  DEFAULT

                 Update Options
                 --------------
b)  Use Barcode Rules   r)  Volume Group for REMOVED media
m)  Media Type          a)  Volume Group for ADDED or MOVED media
i)  Media ID Prefix     p)  Volume Pool

h)  Help
q)  Quit Menu

ENTER CHOICE:
```

▼ To change update options

1. Choose whether to use barcode rules when adding new media, by using the b option to toggle Use Barcode Rules between YES and NO.

Note Media Manager attempts to use barcode rules only for barcodes that are not already in the volume database.

- YES causes Media Manager to search existing barcode rules and apply them to new media that has been inserted into a robot.
- NO causes Media Manager to ignore the barcode rules.

See "Configuring Barcode Rules" on page 467 for more information on barcode rules and how to define them.

2. If you are updating an API robot, check the Media Type Mappings.

   To change the mapping choose c from the Update Options menu and make your changes on the menu. The c option appears only for these robot types.

   The default mapping originates from the `vm.conf` file on the host where you are running `vmadm`. If this file does not exist or contain a mapping for the media, Media Manager uses the defaults for these robot types (see the tables in "Default and Allowable Media Types for API Robots" on page 203).

3. Choose m to open a menu that shows the media types that are valid for this robot. The menu will be similar to the following example:

```
Media Type
----------
1)  DEFAULT
2)  1/2″ cartridge tape
3)  1/2″ cartridge tape 2
```

```
4)  DLT cartridge tape
5)  DLT cartridge tape 2
6)  1/2" cleaning tape
7)  1/2" cleaning tape 2
8)  DLT cleaning tape
9)  DLT cleaning tape 2

Enter Choice [1-9]:  (1)
```

a. If you are *not* using barcode rules:

- To use the default media type, select DEFAULT.

  If the robot is an API robot, Media Manager uses the Media Type Mappings that are displayed.

  If a robot is not an API robot, Media Manager uses the default media type for the robot (see the table "Default Media Types for Robots (Not API robots)" on page 188) as follows:

  If all of the drives in the robotic library (configured on this robot host) are the same type and at least one drive is configured on the robot control host, then Media Manager uses the media type for the drives.

  If all of the drives in the robotic library (configured on this robot host) are not the same type, then Media Manager uses the default media type for the robotic library.

- To use a media type other than the default, choose one from the menu.

  Selecting from the menu is required if the robotic library supports multiple media types and you do not want the default media type.

  The following point applies only to NetBackup Enterprise Server.

  Selecting from the menu is required, if the drives are not configured on the robot control host and the drives are not the default media type for the robot.

b. If you *are* using barcode rules:

- Choose DEFAULT to let the barcode rule determine the media type that is assigned.

  For example, assume you want to add both DLT and half-inch cartridges to a TLD robot with a single update operation. To accomplish this, first create separate rules for DLT and half-inch cartridges and select the specific media type in the barcode rules. Then, select DEFAULT from the Update Options menu. Media Manager will now use the media type in the barcode rules when it does the inventory and update.

Note If you also choose DEFAULT for the barcode rule, Media Manager assigns the default media type for the robot (see the table "Default Media Types for Robots (Not API robots)" on page 188).

- To use a media type other than the default, choose a specific type from the menu.

  For example, to use the same rule to add DLT or half-inch cartridges to a TLD robot, choose specific media from the Update Options menu and DEFAULT for the barcode rule. Now you can perform one update for DLT and another for half-inch cartridge and use the same rule for both.

  The update media type always overrides the rule. If you specify any value other than DEFAULT on the Update Options menu, the media type for the rule must be the same type or DEFAULT in order to obtain a match (except for cleaning media as explained later).

  The following sample list shows what happens for various combinations of update and barcode rule media types.

Update Options Media Type	Barcode Rule Media Type	Rule Used	Media Type in Volume Database
DLT	DEFAULT	Yes	DLT
1/2" CART	DEFAULT	Yes	1/2" CART
DLT	DLT	Yes	DLT
DLT	DLT CLEAN	Yes	DLT CLEAN
DLT CLEAN	DLT	No	DLT CLEAN
DLT CLEAN	DLT CLEAN	Yes	DLT CLEAN
DLT CLEAN	DEFAULT	Yes	DLT CLEAN
DLT	(4MM ...)	No	DLT
DEFAULT	DEFAULT	Yes	DLT
DEFAULT	DLT	Yes	DLT
DEFAULT	DLT CLEAN	Yes	DLT CLEAN
DEFAULT	1/2" CART	Yes	1/2" CART
DEFAULT	(4MM ...)	No	Robot-type dependent

- The fourth barcode rule in the list shows Media Manager's ability to automatically add cleaning cartridges with regular media, when you execute an update for a robot.

  If the media you insert includes a cleaning tape, then Media Manager automatically adds the tape correctly, if the following are true:

  - The update media type is for the regular media (DLT in this example).
  - The barcode on the tape matches a barcode tag and the barcode rule media type is the cleaning media (DLT CLEAN in this example).

Also see "Example 5: Adding Cleaning Tapes to a Robot" on page 216.

- The sixth and seventh rules in the list illustrate how to add only cleaning media.

  In the sixth rule, you specify the cleaning media type on both the Update Options menu and in the barcode rule. In the seventh rule, you specify the cleaning media on the Update Options menu and choose default in the barcode rule.

4. Choose a to open a menu for selecting the volume group that Media Manager will assign to media that you have inserted into the robot (or moved to a new location within the robot). The menu always has choices for the following:

   - Specifying a new volume group name.
   - Auto generating a new volume group (default). You can also auto generate a new volume group name by entering DEFAULT for the new volume group name.

   Other choices that are available depend on the selected media type.

   - If Media Type is DEFAULT, the menu shows existing volume groups that are valid for the robot's default Media Type.
   - If Media Type is other than DEFAULT, the menu shows the existing volume groups that are valid for the media type.

```
Volume Group
------------
1)  00_000_TL8
2)  Specify New Volume Group Name
3)  Auto-Generate New Volume Group Name
Enter choice:
```

5. Choose r to open a menu for selecting the volume group that Media Manager will assign to media that you have removed from the robot. The menu always has choices for the following:

   - Specifying no volume group name.
   - Specifying a new volume group name.
   - Auto generating a new volume group (default). You can also auto generate a new volume group name, by entering DEFAULT for the new volume group name.

   Other choices that are available depend on the selected media type, as follows:

   - If Media Type is DEFAULT, the menu shows existing volume groups that are valid for the robot's default Media Type.
   - If Media Type is other than DEFAULT, the menu shows the existing volume groups that are valid for the media type.

```
Volume Group
```

```
------------
1)  00_000_NON
2)  No Volume Group
3)  Specify New Volume Group Name
4)  Auto-Generate New Volume Group Name
Enter choice:
```

6. Specify a value for Media ID prefix if either of the following conditions are true (see step 1 under "Inventory and Update Robot Volume Configuration" on page 456):

   - The robot does not support barcodes
   - The media that was inserted does not have readable barcodes.

   If *neither* of the previous conditions are true, a prefix is not required since Media Manager assigns the last six characters of the barcode or the specific characters that you specify if you are using Media ID generation rules as the media ID for media added to the robot. This applies whether or not a barcode rule is used.

   To select a value for Media ID prefix, choose i from the Update Options menu to display a selection list that is similar to the following:

```
Media ID Prefix
-------------
1)  NV
2)  NETB
3)  ADD
4)  Default Media ID Prefix
5)  Use No Media ID Prefix
6)  Specify New Media ID Prefix
Enter choice:
```

   Choose one of the following from the list:

   - If there are existing media ID prefixes, you can choose one of them from the list. The existing prefixes come from MEDIA_ID_PREFIX entries that you added to the `vm.conf` file on the host where you are running `vmadm`. For example, entries for the previous list would be:

```
MEDIA_ID_PREFIX = NV
MEDIA_ID_PREFIX = NETB
MEDIA_ID_PREFIX = ADD
```

   - Default Media ID Prefix

     In this case, Media Manager first checks the `vm.conf` file for MEDIA_ID_PREFIX entries, as follows:

     - If `vm.conf` has MEDIA_ID_PREFIX entries, then Media Manager assigns the last one as the default prefix.

- If `vm.conf` does not have any prefix entries, Media Manager assigns the letter A as the default prefix.

- Use No Media ID Prefix

  This operation will succeed only if the robot supports barcodes and the media has readable barcodes. Otherwise, Media Manager is unable to assign new media IDs and the operation fails (with an accompanying error message).

  This choice may be useful if you are using media with barcodes and want updates to fail when unreadable or missing barcodes are encountered.

- Specify New Media ID Prefix

  You can specify a new media ID prefix having from one to five alpha-numeric characters. Media Manager assigns the remaining numeric characters. For example, if the prefix is NETB, the media IDs are NETB00, NETB01, and so on.

  For optical disk media, the final character reflects the platter side, unless you choose NO for Use Platter Side in Optical ID (see step 7).

Note A new media ID prefix is used only for the current operation. It is not added to `vm.conf` and does not appear in the Media ID prefix list the next time you use the Update Options menu.

7. If the robot is an ODL robot, choose the s option to toggle Use Platter Side in Media ID to YES or NO, depending on whether you want designate the platter-side in media IDs for optical disk media.

Note Use Platter Side in Media ID appears on the Update Options menu only if you are doing the inventory and update on an ODL robot and are using a Media ID Prefix.

The two sides of an optical disk platter are referred to as media ID partners.

- If you set Use Platter Side in Media ID to YES, one side will have a media ID of *xxxxx*A and the other side *xxxxx*B, where *xxxxx* is the media ID prefix and is an auto-generated number.

- If you set Use Platter Side in Media ID to NO, the platter side is not included in the media ID.

8. Choose p to change the volume pool from the default. A menu similar to the following appears.

If you *are* using barcode rules:

- Choose Default Volume Pool to let the barcode rule determine the volume pool that is assigned.

- To use a volume pool other than the default, choose one from the menu.

The Update Options volume pool always overrides the rule.

If you are *not* using barcode rules:

- Choose Default Volume Pool to use the NetBackup volume pool for data volumes and no volume pool for cleaning tapes (the same as choosing None).
- To use a volume pool other than the default, choose one from the menu.

```
Volume Pool
----------
1)  None
2)  NetBackup
3)  a_pool
4)  DataStore
5)  Default Volume Pool
Enter choice:
```

9. When you are satisfied with the settings, choose q to return to the Inventory and Update Robot menu.

Configuring Barcode Rules

A barcode rule specifies criteria for creating volume database entries for new robotic volumes that you are adding through an auto-populate or inventory and update operation (see "Auto-Populating a Robot" on page 424 and "Inventory and Update Robot Volume Configuration" on page 456). You select whether to use barcode rules when you set up the auto-populate, or inventory and update.

The following are some sample barcode rules.

```
Barcode     Media      Volume     Max Mounts/
Tag         Type       Pool       Cleanings    Description
-------------------------------------------------------------
0080        8MM        b_pool      55          new 008 volumes
DLT         DLT        d_pool     200          dlt backup
CLD         DLT_CLN    None        30          dlt cleaning
CLT         8MM_CLN    None        20          8mm cleaning
TS8         8MM        t_pool       0          8mm backup
TS          8MM        None         0          8mm no pool
<NONE>      DEFAULT    None         0          no barcode
<DEFAULT>   DEFAULT    NetBackup    0          other barcodes
```

Barcode Rule Sorting

Rules are sorted, first according to the number of characters in the barcode tag (see the previous example barcode rule list) and then in the order you add them. The two exceptions are the <NONE> and <DEFAULT> rules which are always at the end of the list.

When an inventory and update, or auto-populate operation uses barcode rules and a new barcode is detected in a slot, Media Manager searches the rules starting at the top of the list and checks for a barcode tag that matches the new barcode.

If a barcode tag matches, the media type for the rule is checked to ensure that it is compatible with what you specified for the inventory and update. If the media type also matches, Media Manager uses the rule's media type, volume pool, max mounts (or number of cleanings), and description to create a volume database entry for the media ID.

Note Media Manager attempts to use barcode rules only for barcodes that are not already in the volume database.

Barcode Rule Examples

For example, assume that during an inventory and update for a TS8 robot, you select the following update options for a new 8 mm tape (see "Inventory and Update Robot Volume Configuration" on page 456):

```
Media Type: 8MM
Volume Group: 00_000_TS8
Use Barcode Rules: YES
Volume Pool: DEFAULT
```

If a new tape in this robot has a barcode of TS800001 and there are no media generation rules defined, Media Manager uses the rule with the barcode tag named TS8 and includes the following values in the volume database entry for the tape:

```
Media ID: 800001 (last six characters of barcode)
Volume Group: 00_000_TS8
Volume Pool: t_pool
Max Mounts: 0 (infinite)
```

If a new tape has a barcode of TS000001 and there are no media generation rules defined, the rule named TS is used and volume database entry for the tape will contain:

```
Media ID: 000001 (last six characters of barcode)
Volume Group: 00_000_TS8
Volume Pool: None
Max Mounts: 0 (infinite)
```

Barcode Rule Menu

To configure barcode rules, choose Configure Barcode Rules from the Special Actions menu. The following menu appears:

```
          Display Mode:  BRIEF
   Output Destination:  SCREEN

  Configure Barcode Rules
  -----------------------
  a)  Add Rule
  c)  Change Rule
  d)  Delete Rule
  l)  List Rules

  m)  Mode (brief or full)
  o)  Output Destination (screen or file)
  h)  Help
  q)  Quit Menu

  ENTER CHOICE:
```

Adding a Barcode Rule

To add a new barcode rule, choose a from the Configure Barcode Rules menu and enter the following information at the prompts:

Barcode Tag

Enter a barcode tag for the rule. The tag can have from 1 to 16 characters and no spaces.

The only rules where you can use special characters in the barcode tags are as follow:

- <NONE >

  Matches when rules are used and the media has an unreadable barcode, or the robot does not support barcodes.

- <DEFAULT>

  For media with barcodes, this tag matches when none of the other barcode tags match, providing the media type in the <DEFAULT> rule and the media type on the Update Options menu are compatible. The Update Options menu is where you set up the criteria for an inventory and update operation (see “Inventory and Update Robot Volume Configuration” on page 456).

Description

Enter a 1 to 25 character description of the rule that will be assigned to new volumes when the rule is used.

Media Type

A rule is disregarded if the media type in the rule is not compatible with the media type for the update. See "Inventory and Update Robot Volume Configuration" on page 456.

Select the media type for this rule, as follows:

- Select DEFAULT to have the rule match *any* media type that you select on the Update Options menu. If you also select DEFAULT for the update, Media Manager uses the default media type for the robot. See "Media Settings Tab (Advanced Options)" on page 180.
- Select a specific media type to have the rule match *only* when you select that specific media type or DEFAULT on the Update Options menu. If you choose DEFAULT for the update, Media Manager assigns the rule's media type.

The following example shows the results with various combinations of update selections and barcode rule media types for a TLD robot. This type of robot is the most complex case because it can have DLT or half-inch cartridge media.

Update Options Media Type	Barcode Rule Media Type	Rule Used	Media Type in Volume Database
dlt	default	Yes	dlt
1/2″ cart	default	Yes	1/2″ cart
dlt	dlt	Yes	dlt
dlt	dlt clean	Yes	dlt clean
dlt clean	dlt	No	dlt clean
dlt clean	dlt clean	Yes	dlt clean
dlt	(4mm ...)	No	dlt
default	default	Yes	dlt
default	dlt	Yes	dlt
default	dlt clean	Yes	dlt clean
default	1/2″ cart	Yes	1/2″ cart
default	(4mm ...)	No	Robot-type dependent

Maximum Allowed Mounts or Number of Cleanings

When a barcode rule is used, Media Manager adds the number you specify to the volume database for the media ID.

For media other than cleaning tapes, enter the maximum number of mounts to allow for this media ID (also see "Setting the Maximum Mounts for Volumes" on page 450).

For cleaning tapes, enter the number of cleanings to allow (also see "Changing the Cleanings Allowed for a Cleaning Tape" on page 450).

Volume Pool

Specify a volume pool for the volume. This is the pool that the volume will be added to when a barcode matches the rule.

Whenever the barcode rule is used and the Update Options menu shows

- DEFAULT for the volume pool, then the volume is assigned to the pool specified in the barcode rule.
- A specific volume pool, then that selection overrides the pool specified in the barcode rule.

Changing a Barcode Rule

To change a barcode rule, choose c from the Configure Barcode Rules menu and select the desired rule from the resulting list. You are then prompted to change the description, Media Type, Maximum Allowed Mounts (or Number of Cleanings), and Volume Pool.

For Media Type, Maximum Allowed Mounts, and Number of Cleanings, the current value appears in parentheses (pressing the Enter key without typing a new value leaves the value unchanged).

Note You cannot use Change Barcode Rule to change the barcode tag. To change a barcode tag, delete the rule and then add a rule with the new tag.

Deleting a Barcode Rule

To delete a barcode rule, choose d from the Configure Barcode Rules menu and select the desired rule from the list.

Listing Barcode Rules

To list existing barcode rules, set the Display Mode and Output Destination options and then choose l (List Rules) from the Configure Barcode Rules menu.

Formatting Optical Disks

Before an optical disk platter can be used with Media Manager, a media ID (this should match the external media ID) and a volume label must be written to it. There are two ways to write this information:

- Format the platter when you add the optical disk volume using `vmadm`.
- Use the `tpformat` command.

When you use `vmadm`, the media ID becomes the recorded media ID. The following steps use `vmadm`. See `tpformat` in the NetBackup commands for UNIX reference guide for a description of how to use `tpformat`.

Note All platforms and operating systems do not support 1024 byte-per-sector platters. Most support only 512 byte-per-sector sizes. Before purchasing optical disk platters, check your vendor documentation to determine the sector sizes supported by your platform and operating system. Also see the VERITAS support web site for information on what is supported. VERITAS urges you to use platters that are already formatted.

▼ To format an optical disk

1. Perform the same steps for adding a volume, described in the preceding sections on adding single volumes or ranges of volumes.

2. The last step is a prompt similar to the following. (*xxxxx*A and *xxxxx*B represent sides A and B of the volume's platter). Enter y to proceed or n to cancel the operation.

   ```
   Do you want to tpformat xxxxxA and xxxxxB? (y/n)
   ```

   The `tpformat` request is sent to the host on which `vmadm` is running. This action may cause a mount request that requires manual assignment by the operator. If labels already exist on the tape, you are asked if they should be overwritten.

   Even if the formatting cannot be completed for some reason, the volume or volumes are still added.

STK Automated Cartridge System (ACS) D

Note *This appendix applies only to NetBackup Enterprise Server.*

Under Media Manager, robotic support for Automated Cartridge System robots is classified as ACS and these robots are considered API robots (a Media Manager grouping of robots where the robot manages its own media).

Media Manager operates differently with a StorageTek ACS robot (STK library or STK silo) than it does with most other robots. The main difference is that Media Manager does not keep slot locations for the media, since this information is provided by the ACS library software component of an ACS robot.

The *ACS library software* component can be any of the following STK products. See "Sample ACS Configuration" on page 474.

- Automated Cartridge System Library Software (ACSLS)
- STK Library Station
- Storagenet 6000 Storage Domain Manager (SN6000)

  This STK hardware serves as a proxy to another ACS library software component (such as, ACSLS).

The term *Automated Cartridge System (ACS)* can refer to any of the following:

- A type of Media Manager robotic control.
- The StorageTek (STK) system for robotic control.
- The highest-level component of the STK ACS library software, which refers to a specific standalone robotic library or to multiple libraries connected with a media passthru mechanism.

The topics in this appendix include the following:

- Typical ACS configurations.
- How Media Manager components handle media requests for an ACS robot.
- Configuration and operational differences to be aware of when using these robots.
- Advanced ACS topics.

Sample ACS Configuration

The following figure and accompanying table show a typical Automated Cartridge System configuration, and explain the major components in this configuration.

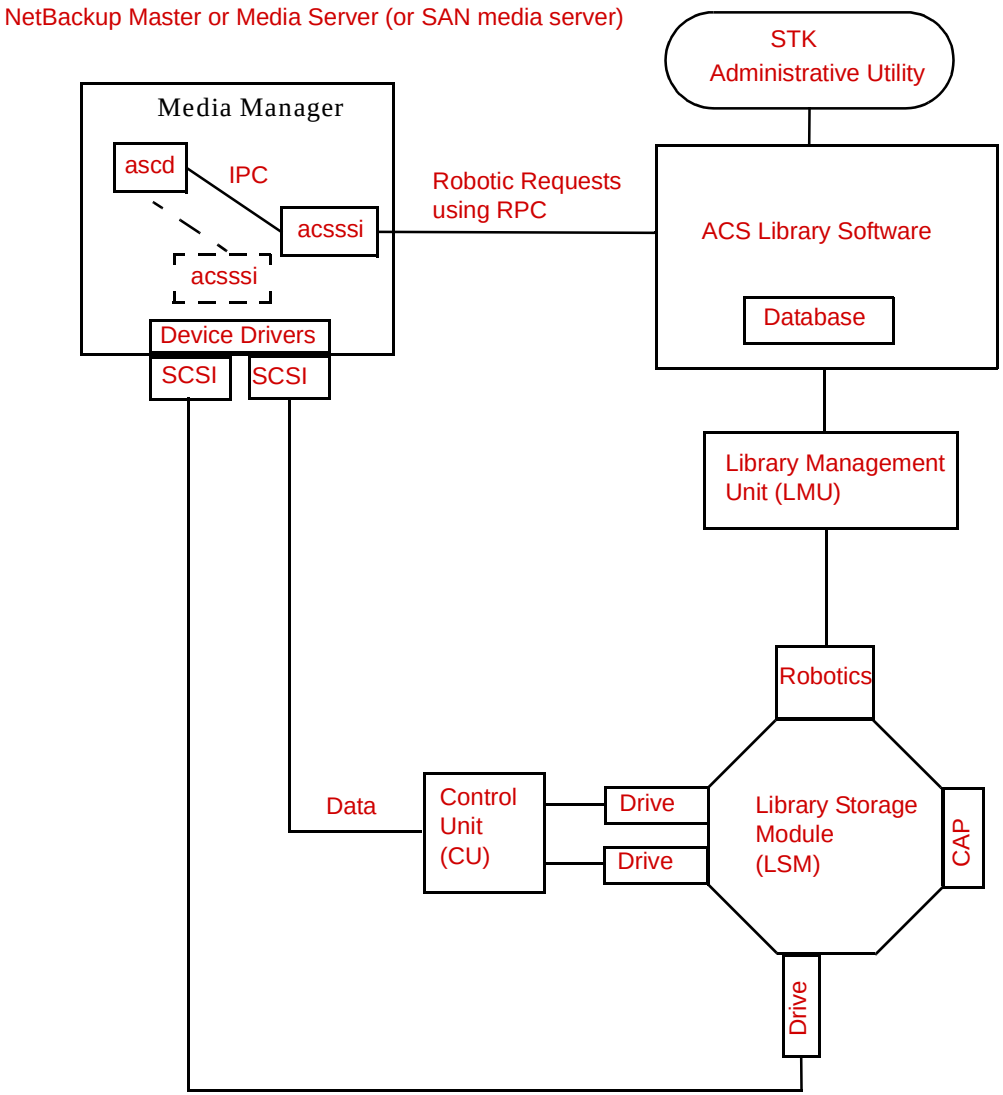

Component	Description
Media Manager server	Acts as a client to the ACS library software host. The ACS robotic daemon (`acsd`) formulates requests for mounts, unmounts, and inventories. An API then routes these requests to the ACS Storage Server Interface (`acsssi`) using IPC communications. The requests are converted into RPC-based communications and sent to the ACS library software.
ACS library software (any of the following) ◆ Automated Cartridge System Library Software (ACSLS) ◆ STK Library Station ◆ Storagenet 6000 Storage Domain Manager (SN6000)	Receives robotic requests from Media Manager and uses the Library Management Unit to find and mount, or unmount the correct cartridge on requests involving media management. On compatible host platforms, you may be able to configure ACS library software and Media Manager software on the same host.
Library Management Unit (LMU)	Provides the interface between the ACS library software and the robot. A single LMU can control multiple ACS robots.
Library Storage Module (LSM)	Contains the robot, drives, and/or media.
Control Unit (CU)	The Media Manager server connects to the drives through device drivers and a Control Unit (tape controller). The Control Unit may have an interface to multiple drives. Some Control Units also allow multiple hosts to share these drives. Most drives do not require a separate Control Unit. In these cases, the Media Manager server connects directly to the drives.
CAP	Cartridge Access Port.

Media Requests

A request for media in an ACS robot begins in the same manner as other media requests. The Media Manager device daemon, `ltid`, receives the request for a specific tape volume and drive density, and queries the Media Manager volume daemon, `vmd`, for the location of the media. `vmd` returns only the robot number and media type, since Media Manager does not manage slot information for media in an ACS robot.

`ltid` verifies that the requested volume's media type and density are compatible. Next, `ltid` checks its internal tables (these tables are based on the device databases) to determine if there is an available drive and sends a mount request to the ACS daemon, `acsd`.

`acsd` formulates the request and uses Internal Process Communications (IPC) to send it to the ACS Storage Server Interface (`acsssi`). The request is then converted into RPC-based communications and sent to the ACS library software.

ACS library software locates the media and sends the necessary information to the Library Management Unit, which directs the robotics to mount the media in the drive. When `acsssi` (on the Media Manager server) receives a successful response from the ACS library software, it returns the status to `acsd`.

`acsd` waits for `avrd` to scan the drive. When the drive is ready, `acsd` sends a message to `ltid` that completes the mount request and enables the requesting application (for example, NetBackup) to start sending data to the drive.

Configuring ACS Robotic Control

When adding an ACS robot, specify the robot number, robot type, and the name of the host that contains the ACS library software. A device file is not used. The robotic control path is through the ACS library software host, and requests are handled by LibAttach (on Windows servers) or the acsssi process (on UNIX servers).

Also see "Configuring Storage Devices" on page 17 for information on configuring ACS robots.

Configuring ACS Drives

An ACS robot supports DLT or 1/2-inch cartridge tape drives. If an ACS robot contains more than one type of DLT or 1/2-inch cartridge tape drive, you can configure an alternate drive type.

This means that there can be up to three different DLT and three different 1/2-inch cartridge drive types in the same robot. If you are using alternate drive types, it is important that the volumes are configured using the same alternate media type. Six drive types are possible, as follows: DLT, DLT2, DLT3, HCART, HCART2, and HCART3.

Use the same methods to create or identify device files for these drives as for other drives. If the drives are SCSI and connect to the robot through a shared control unit, you must specify the logical unit number (lun) for each drive, as they share the same SCSI ID.

Refer to the system documentation for your platform and operating system for details on configuring drives and logical unit numbers. The NetBackup Media Manager device configuration guide also has information on configuring device files.

Although device file configuration is essentially the same as for other robot-controlled drives, you must include the following additional information when defining the drives in Media Manager as robotic.

ACS Drive Coordinate	Description
ACS number	The index, in ACS library software terms, that identifies the robot that has this drive.
LSM number	The Library Storage Module that has this drive.
Panel number	The panel where the drive is located.
Drive number	The physical number of the drive in ACS library software terms.

Also see "Configuring Storage Devices" on page 17 for information on configuring ACS drives.

The following figure shows the location of this information in a typical ACS robot:

ACS Robot and Drive Configuration Information

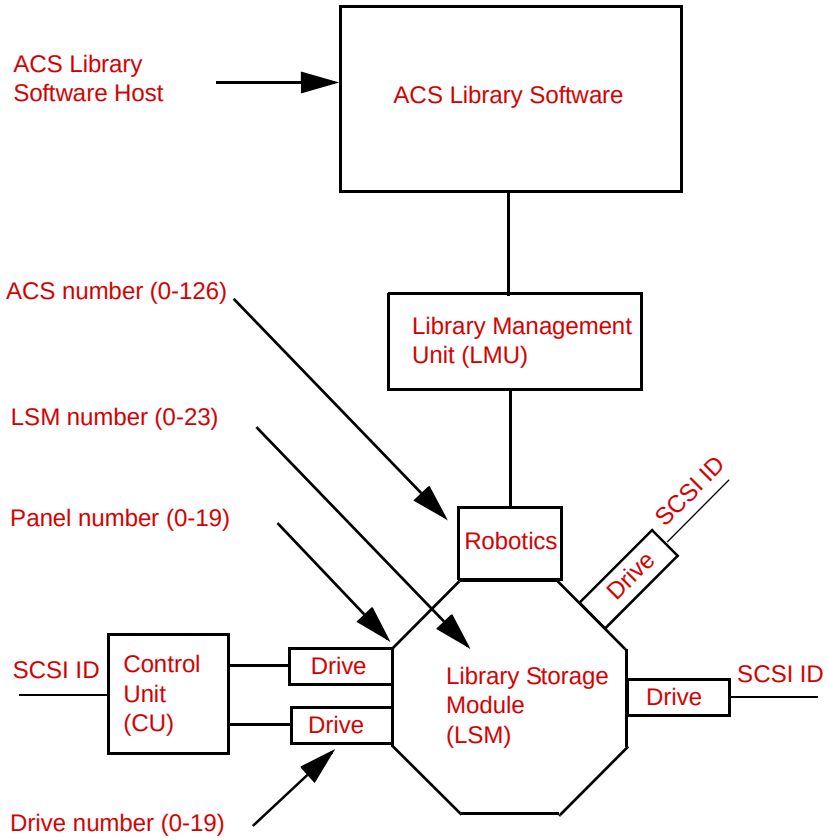

Configuring Shared ACS Drives

The following procedure uses the Device Configuration wizard to configure drives in an SSO configuration. Using this procedure can significantly reduce the amount of manual configuration required in an SSO environment. For example, if you have 20 drives shared on 30 hosts, these configuration steps require just 20 device paths to be manually configured, instead of 600 device paths.

During the setup phase, the wizard will attempt to discover the tape drives available; and for the robot types where serialization is available, the positions of the drives within the library. This wizard does not obtain drive serial numbers from the ACS robotic library control interface, so some manual configuration is required.

▼ To use the Device Configuration wizard

1. Run the Device Configuration wizard on one of the hosts where drives in an ACS-controlled library are attached. Allow the drives to be added as standalone drives.

2. Add the ACS robot definition and update each drive to indicate its appropriate position in the robot. Make each drive robotic and add the ACS, LSM, Panel, and Drive information.

   See "Correlating Device Files to Physical Drives When Adding Drives" on page 329 for help in determining the correct addressing and verifying the drive paths.

3. After the drive paths have been verified on one host, re-run the wizard and specify that all hosts that have ACS drives in the library should be scanned.

   The wizard will add the ACS robot definition and the drives to the remaining hosts with correct device paths (assuming that the devices and their serial numbers were successfully discovered and that the drive paths were correctly configured on the first host).

The use of SANs (including switches rather than direct connection) can increase the possibility of errors. If you are experiencing errors, you can manually define the tape drive configuration by using the NetBackup Administration Console or the command line.

Care must be taken to avoid any errors. With shared drives, the device paths must be correct for each server. Also ensure that the drives are defined correctly to avoid errors where drives are defined to be in ACS index number 9, instead of ACS index 0.

Using the STK SN6000

The StorageTek SN6000 provides tape drive virtualization. Logical tape drives are presented to host operating system interfaces (tape drivers), while robotic control is accomplished through the ACS API.

Some SN6000 configurations may involve a different number of *logical* drives compared to the number of *physical* drives (or equivalent resources) available for satisfying requests for drives. Also, the relationship between the number of logical drives and physical drives may change if hardware failures occur.

NetBackup scheduling, drive allocation, and drive assignment algorithms are only able to determine *logical* drive availability, and will attempt to fully utilize all configured and available logical drives. If the number of logical drives being utilized exceeds the number of physical drives available, a NetBackup job may be started when insufficient drive

resources are available to satisfy the job. The NetBackup job will encounter a resource issue when the scheduler initiates a job resulting in an ACS tape mount request. The mount request will then be re-queued within the ACS daemon process.

Should SN6000 Drives Be Configured as Shared Drives?

The answer depends on how you connect hosts to SN6000 ports. Each SN6000 port presents a distinct set of logical drives. Drives accessed from different ports have different ACS drive addresses (ACS, LSM, Panel, and Drive numbers) for each drive, as well as different serial numbers.

You must enter the Shared Drives license key on each media server where ACS drives in the SN6000 are configured.

Hosts Connected To a Single Port

If multiple hosts are connected to a single port, the logical drives accessible through that port are shared among the hosts connected to that port. The drive address and serial number is the same for each host on that port. In this type of configuration, the drives should be configured as *shared drives* in the NetBackup device configuration.

Hosts Connected To Different Ports

If each host is connected to a different port, each host will have its own set of logical drives and the drives should *not be* configured as shared drives in the NetBackup device configuration.

With this type of configuration, the SN6000 hardware is providing drive sharing and the NetBackup scheduler and robotic drive selection components are unable to avoid oversubscribing the drives. Tuning of the media mount timeout and backup policy windows may be needed to avoid backup, restore, or duplication delays, and media mount time outs.

NetBackup Tuning When Using Different Ports

Since there is a fixed limit for the number of drives that can be in use at any one time in this type of configuration, you should configure backup windows so the different NetBackup storage units tied to the same physical drives are active only at non-overlapping times. Also, raise or set the media mount timeout to infinite to prevent job failures when the job cannot get a physical drive due to all the drives being busy.

Adding Volumes

ACS robotic control software supports the following characters in a volume ID that are *not* considered valid media ID characters in NetBackup and Media Manager. (Volume ID is the ACS term for media ID).

- $ (dollar sign)
- # (pound sign)
- The yen symbol
- Leading and trailing spaces

▼ To add ACS media

1. Add barcode labels to the media and insert the media into the robot using the media access port.

2. Do one of the following to empty the media access port and have the Library Storage Module read the barcode labels and pass the barcode information to the ACS library software, which uses the barcodes for volume IDs. The ACS library software also tracks the location of the tape within the robot.

   - Issue the ACS `enter` command from the STK Administrative interface (`ACSSA`).
   - Issue the ACS `enter` command from the Media Manager utility, `acstest`.

3. Define the media for Media Manager using the ACS volume IDs as media IDs. Do one of the following to define the media:

   - Update the volume configuration using the robot inventory function as explained in "Updating the Volume Configuration for a Robot" on page 174.
   - Add new volumes as explained in "Adding New Volumes" on page 128.

   Since the ACS volume IDs and barcodes are the same, Media Manager also has the barcodes for the media. Note that you do not enter a slot location because that information is managed by ACS library software.

4. Use **Show Contents** and **Compare Contents with Volume Configuration** from the Media and Device Management Robot Inventory dialog to verify your configuration.

Removing Volumes

You can remove tapes using the STK utility or by using Media Manager.

Removing Volumes Using the STK Utility

If you remove media from an ACS robot, for example through the Cartridge Access Port using the STK administrative utility (see the figure in "Sample ACS Configuration" on page 474), you must logically move the media to standalone in the Media Manager volume database. To accomplish this, do one of the following:

- Update the volume configuration, as explained in "Updating the Volume Configuration for a Robot" on page 174.
- Move volumes as explained in "Moving Volumes" on page 141.

If you do not do this, Media Manager will not be aware that the media is missing and may issue mount requests for it. The result is an error, such as Misplaced Tape.

It does not matter, however, if you move media from one location to another within the robot. The ACS library software will find the requested media, if its database is current.

Removing Volumes Using Media Manager

You can remove volumes using one of the following methods. Either of these methods performs the logical move and the physical move.

- Use the NetBackup Administration Console (see "Methods for Ejecting Volumes From a Robot" on page 126).
- Use the `vmchange` command (see the NetBackup commands for UNIX reference guide).

Robot Inventory Operations

Note An `INVENTORY_FILTER` entry is required in the `vm.conf` file if you are doing a robot inventory for an ACS robot and the ACS library software host is an STK Library Station.

Media Manager considers an ACS robot as one that supports barcodes. The following sequence explains what occurs when you select an operation that requires a robotic inventory of an ACS robot:

1. Media Manager requests volume information from the ACS library software.

2. The server responds by providing a listing of the volume IDs and media types from its database. The following table is an example of the ACS information that Media Manager receives:

ACS Volume ID	ACS Media Type
100011	DLTIV
200201	DD3A
412840	STK1R
412999	STK1U
521212	JLABEL
521433	STK2P
521455	STK2W
770000	LTO_100G
775500	SDLT
900100	EECART
900200	UNKNOWN

3. Media Manager translates the volume IDs into media IDs and barcodes. For example in the previous table, volume ID 100011 becomes media ID 100011 and the barcode for that media ID is also 100011.

4. If the operation does not require updating the volume configuration, Media Manager uses the media type defaults for ACS robots when it creates its report.

   "How Contents Reports for API Robots are Generated" on page 170 shows an example of this report.

5. If the operation requires updating the volume configuration, Media Manager maps the ACS media types to the Media Manager media types as explained in "Media Type Mappings Tab (Advanced Options)" on page 201.

The Update Volume Configuration report for an ACS robot is similar to the figure shown for an API robot in "Procedure To Update the Volume Configuration" on page 177.

Advanced ACS Robot Topics

The following sections cover these advanced NetBackup Enterprise Server topics:

- ACS Daemon (acsd)
- ACS Storage Server Interface (acsssi)
- ACS SSI Event Logger (acssel)
- ACS Robotic Test Utility (acstest)
- Making ACS Robotic Configuration Changes
- Multiple ACS Robots with One ACS Library Software Host
- Multiple ACS Robots and ACS Library Software Hosts
- Robotic Inventory Filtering

ACS Daemon (acsd)

`acsd` provides robotic control for mounting and dismounting volumes, and requesting inventories of volumes in a robotic library that is under the control of ACS library software. `acsd` interacts with and is started by `ltid`. You can also start `acsd` manually, if `ltid` is already running.

`acsd` requests SCSI tape unloads through the system's tape driver before using the ACS API to request tape dismounts. This matches other types of Media Manager robotic control, and accommodates configurations involving SCSI multiplexors. Loaded tapes are not forcibly ejected when a dismount operation occurs.

When `acsd` is started, it starts `acsssi` and `acssel`. When starting `acsssi`, `acsd` passes the ACS library software host name to `acsssi`. One copy of `acsssi` is started for each ACS library software host that appears in the Media Manager device configuration for the media server (or SAN media server). If you have multiple media servers sharing drives in an ACS robot, `acsssi` must be active on each media server.

See "ACS Storage Server Interface (acsssi)" on page 485 and "ACS SSI Event Logger (acssel)" on page 487 for information about these processes.

ACS Storage Server Interface (acsssi)

acsssi is the storage server interface (SSI) for a particular ACS library software host. All RPC communications from acsd or the ACS robotic test utility intended for ACS library software are handled by acsssi.

One copy of acsssi must be running for each unique ACS library software host that is configured on a Media Manager server(s). acsd tries to start copies of acsssi for each host, but these acsssi processes fail during initialization if an acsssi process for a particular ACS library software host is already running.

In normal operations, acsssi should be started to run in the background. Log messages for acsssi are sent to acssel. acssel should be started before acsssi. See "ACS SSI Event Logger (acssel)" on page 487 for more information.

The socket name (IP port) used by acsssi can be specified in any of the following ways:

- On the command line, when starting acsssi.
- Using an environment variable (ACS_SSI_SOCKET).
- Through the default value.

Note If you configure acsssi to use a non-default socket name, the ACS daemon and ACS test utility also must be configured to use the same socket name. If this is not done, successful IPC communications cannot be established.

The ACS library software host name is passed to acsssi using the CSI_HOSTNAME environment variable.

acsssi is based on the SSI provided by STK and supports features, such as use of environment variables to affect most aspects of operational behavior. See "Optional Environment Variables" on page 486, for a list of environment variables that are supported.

Using the ACS_SSI_SOCKET Environment Variable

By default, acsssi listens on unique, consecutive socket names starting at 13741. To specify socket names on a ACS library software host basis, you can add a configuration entry in vm.conf.

Use the following format:

ACS_SSI_SOCKET = *ACS_library_software_host socket_name*

The following is an example entry:

```
ACS_SSI_SOCKET = einstein 13750
```

Starting acsssi Manually

Note This is not the recommended method to start `acsssi`. Normally, `acsd` starts `acsssi`.

▼ To start acsssi

1. Start the event logger, `acssel`.
2. Start `acsssi`. The format is `acsssi` *socket_name*.

   The `CSI_HOSTNAME` environment variable is required. The following is a Bourne shell example:

   ```
   CSI_HOSTNAME=einstein
   export CSI_HOSTNAME
   /usr/openv/volmgr/bin/acsssi 13741 &
   ```

Optional Environment Variables

If you want individual `acsssi` processes to operate differently, you can set environment variables before the `acsssi` processes are started manually or from a custom-designed script.

The following are the optional environment variables:

- `SSI_HOSTNAME`

  Specifies the name of the host where ACS library software RPC return packets are routed for ACS network communications. By default, the local host name is used.

- `CSI_RETRY_TIMEOUT`

  Set this to a small positive integer. The default is 2 seconds.

- `CSI_RETRY_TRIES`

  Set this to a small positive integer. The default is 5 retries.

- `CSI_CONNECT_AGETIME`

  Set this in the range of 600 to 31536000 seconds. The default is 172800 seconds.

ACS SSI Event Logger (acssel)

`acssel` is modeled after the `mini_el` event logger provided by StorageTek, so its functional model differs slightly from other robotic test tools provided with Media Manager.

If ACS robots have been configured, the event logger is automatically started by `acsd`. Event messages are logged to the file, `/usr/openv/volmgr/debug/acsssi/event.log`.

Note `acssel` should be running for optimum ACS SSI performance, since `acsssi` tries to connect on the event logger's socket for its message logging. If `acsssi` cannot connect to `acssel`, request processing from ACS library software is delayed. This leads to retries and error recovery situations. VERITAS recommends that `acssel` be kept running for best results.

`acssel` can be started automatically or manually, but only stopped using the `kill` command (such as is done in the NetBackup `bp.kill_all` utility).

The full path to the event logger is `/usr/openv/volmgr/bin/acssel`. The usage format is as follows:

`acssel [-d] -s` *socket_name*

where

- `-d` d displays debug messages (by default, there are no debug messages).
- *socket_name* is the socket name (or IP port) to listen on for messages.

Using acssel with a Different Socket Name

If there is no `ACS_SEL_SOCKET` entry in `vm.conf`, `acssel` listens on socket name 13740 by default. This default can be changed using one of the following methods:

▼ To change the default by modifying the Media Manager configuration file

1. Edit `vm.conf` and add an `ACS_SEL_SOCKET` entry.

   For example:

   ```
   ACS_SEL_SOCKET = 13799
   ```

2. Use `/usr/openv/netbackup/bin/goodies/bp.kill_all` to stop the `acsd`, `acsssi`, and `acssel` processes. (This script stops all NetBackup and Media Manager processes.)

3. Restart the NetBackup / Media Manager daemons.

```
/usr/openv/volmgr/bin/ltid
/usr/openv/netbackup/bin/initbprd
```

▼ To change the default by using environment variables

This method assumes there is one ACS robot configured and the SSI default socket name has not been changed with an `ACS_SEL_SOCKET` entry in `vm.conf`.

1. Use `/usr/openv/netbackup/bin/goodies/bp.kill_all` to stop the `acsd`, `acsssi`, and `acssel` processes. (This script stops all NetBackup and Media Manager processes.)

2. Set the desired socket name in an environment variable and export it.

```
ACS_SEL_SOCKET = 13799
export ACS_SEL_SOCKET
```

Note `acssel` also has a command line option to specify the socket name. However, since the `acsssi` needs to know the event logger socket name, setting an environment variable is preferred.

3. Start the event logger in the background.

```
/usr/openv/volmgr/bin/acssel &
```

4. Set the ACS library software host name for `acsssi` in an environment variable.

```
CSI_HOSTNAME = einstein
export CSI_HOSTNAME
```

5. Start `acsssi`.

```
/usr/openv/volmgr/bin/acsssi 13741 &
```

6. Optionally, start `acstest` using `robtest` or by using the following command line:

```
/usr/openv/volmgr/bin/acstest -r einstein -s 13741
```

Note If you request SCSI unloads, you must also specify drive paths on the `acstest` command line (see "ACS Robotic Test Utility (acstest)" on page 489). This is done automatically by `robtest` if ACS drives have been configured.

7. Start `ltid`, which starts `acsd`. You can use the -v option for verbose message output.

```
/usr/openv/volmgr/bin/ltid
```

During initialization, acsd obtains the SSI Event Logger socket name from vm.conf and sets ACS_SEL_SOCKET in the environment before starting acssel. If acsssi is started manually, it has to use (listen on) the same SSI socket that acsd is using to send data.

ACS Robotic Test Utility (acstest)

acstest allows you to verify ACS communications and provides a remote system administrative interface to an ACS robot. It can also be used to query, enter, eject, mount, unload, and dismount volumes. In addition, acstest allows you to define, delete, and populate ACS library software scratch pools.

acstest depends on acsssi being started successfully. You can use the system command, netstat -a, to verify there is a process listening on the SSI socket. acstest attempts to communicate with ACS library software using acsssi and connects on an existing socket.

acstest should not be used while acsd is servicing requests. Communication problems may occur if acsd and acstest are making ACS requests at the same time.

The usage format follows. You can pass the socket name on the command line. Otherwise, the default socket name (13741) is used.

acstest -r *ACS_library_software_host* [-s *socket_name*]
[-d *drive_path ACS, LSM, panel, drive*] . . . [-C *sub_cmd*]

The following example assumes that acsssi has been started using socket name 13741:

```
/usr/openv/volmgr/bin/acstest -r einstein -s 13741
```

Making ACS Robotic Configuration Changes

After making any ACS robotic configuration changes, you should follow the correct steps so that acsssi can successfully communicate with acsd, acstest, and ACS library software.

Any acsssi processes must be cancelled after your changes are made and before the Media Manager device daemon, ltid, is restarted. Also in order for the acstest utility to function, acsssi for the selected robot must be running.

▼ To make configuration changes

1. Make your configuration changes.

2. Use bp.kill_all to stop all running processes.

3. Restart all processes.

```
/usr/openv/volmgr/bin/ltid
/usr/openv/netbackup/bin/initbprd
```

Multiple ACS Robots with One ACS Library Software Host

NetBackup supports configurations where a NetBackup server is connected to drives in multiple ACS robots, and these robots are controlled from a single ACS library software host. See the following example:

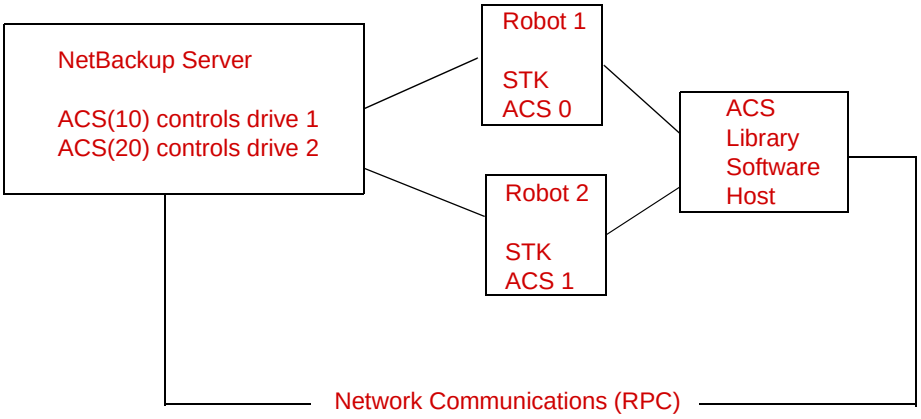

Inventory requests for a robot will include those volumes configured on the ACS library software host which are resident to the ACS robot (ACS 0 or ACS 1) that is designated in the drive address.

In the example, assume that drive 1 has an STK address (ACS, LSM, panel, drive) of 0,0,1,1 in the Media Manager device configuration and is under control of robot number 10 (ACS(10)). If any other drives configured under robot number 10 have a different ACS drive address (for example, 1,0,1,0) it is considered an invalid configuration.

Configurations consisting of multiple LSMs in a single ACS robot are supported if a passthru port exists.

Multiple ACS Robots and ACS Library Software Hosts

NetBackup supports configurations where a NetBackup server is connected to drives in multiple ACS robots and these robots are controlled from separate ACS library software hosts. See the following example:

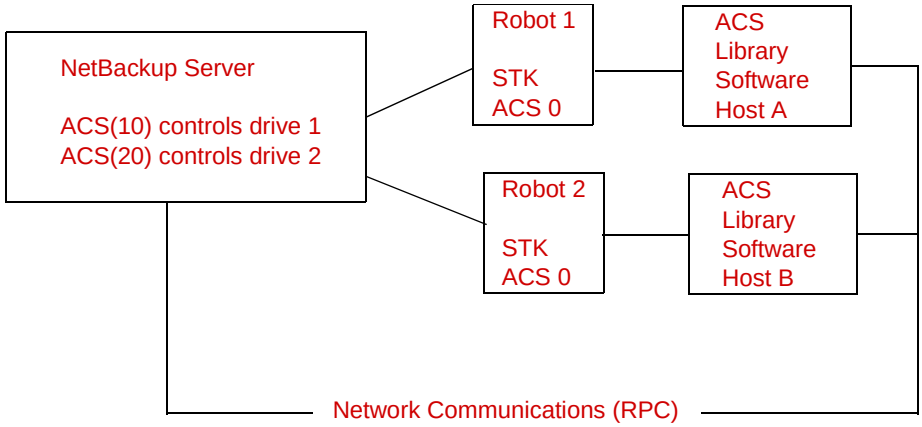

Inventory requests for a robot will include those volumes configured on the ACS library software host (in this example, Host A for Robot 1 and Host B for Robot 2) which are resident to the robot (ACS 0 for each) that is designated in the STK drive address.

In this example, assume drive 1 has an STK address (ACS, LSM, panel, drive) of 0,0,1,1 in the Media Manager device configuration and is under control of robot number 10 (ACS(10)). If any other drives configured under robot number 10 have a different ACS drive address (for example, 1,0,1,0) it is considered an invalid configuration.

Configurations consisting of multiple LSMs in a single ACS robot are supported if a passthru port exists.

Robotic Inventory Filtering

If your site has many volumes configured under ACS library software but you only want NetBackup to use a subset of them, you may be able to use inventory filtering.

Note An `INVENTORY_FILTER` entry is required if you are doing a robot inventory for an ACS robot and the ACS library software host is an STK Library Station.

Partial inventory functionality for ACS is accomplished by using the STK Administrative interface to create an ACS library software scratch pool or set of scratch pools. Then NetBackup can use these pools for backups.

The list of volumes returned in an ACS partial inventory includes the volumes that currently exist in the ACS scratch pool. ACS library software moves volumes out of the scratch pool after they have been mounted.

Therefore, a partial inventory *also* includes those volumes in the Media Manager volume database which Media Manager can validate exist in the robotic library, whether or not the volumes are in the ACS scratch pool. This complete list of volumes that exist in the robotic library is returned to prevent losing track of previously mounted volumes.

Inventory Filtering Example

1. Use the following STK Administrative interface (`ACSSA`) command to create a scratch pool, ID 4, with 0 to 500 as the range for the number of volumes:

   ```
   ACSSA> define pool 0 500 4
   ```

2. Use the following STK Administrative interface (`ACSSA`) command to define the volumes in scratch pool 4:

   ```
   ACSSA> set scratch 4 600000-999999
   ```

3. On the Media Manager server where the inventory request will be initiated add an `INVENTORY_FILTER` entry in the `vm.conf` file.

   `INVENTORY_FILTER = ACS` *robot_number* `BY_ACS_POOL` *acs_scratch_pool1* `[`*acs_scratch_pool2* `...]`

   where

   - *robot_number* is the number of the robot as configured in Media Manager.
   - *acs_scratch_pool1* is the scratch pool ID as configured in ACS library software.
   - *acs_scratch_pool2* is a second scratch pool ID (up to 10 scratch pools are allowed).

   The following entry causes ACS robot number 0 to query scratch volumes from STK pool IDs 4, 5, and 6.

   ```
   INVENTORY_FILTER = ACS 0 BY_ACS_POOL 4 5 6
   ```

IBM Automated Tape Library (ATL) E

Note *This appendix applies only to NetBackup Enterprise Server.*

Media Manager provides support for robotics under control of the IBM Automated Tape Library (ATL), including the IBM Magstar 3494 Tape Library.

Under Media Manager, robotic support for ATL robots is classified as Tape Library Half-inch (TLH) and these robots are also API robots (the robot manages its own media). Support for these devices is different than for other types of Media Manager robotic control. This appendix provides an overview of those differences.

Sample TLH Configurations

The following figures and accompanying table show two possible ATL configurations, and explain the major components in these sample configurations.

Robotic Control Host Communicates Directly to Robot

Media Manager Server

This server can be an AIX, HP-UX, IRIX, Windows, or Solaris server.

This server also can be a NetBackup master or media server (or SAN media server).

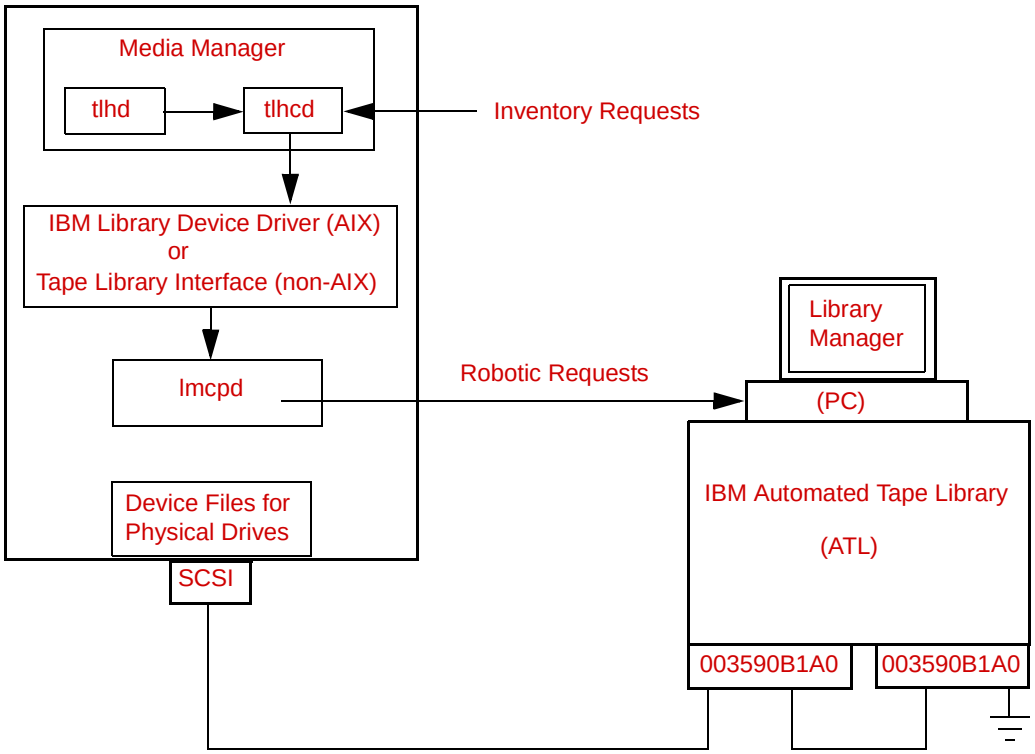

Robotic Control and Robot Connection on Separate Hosts

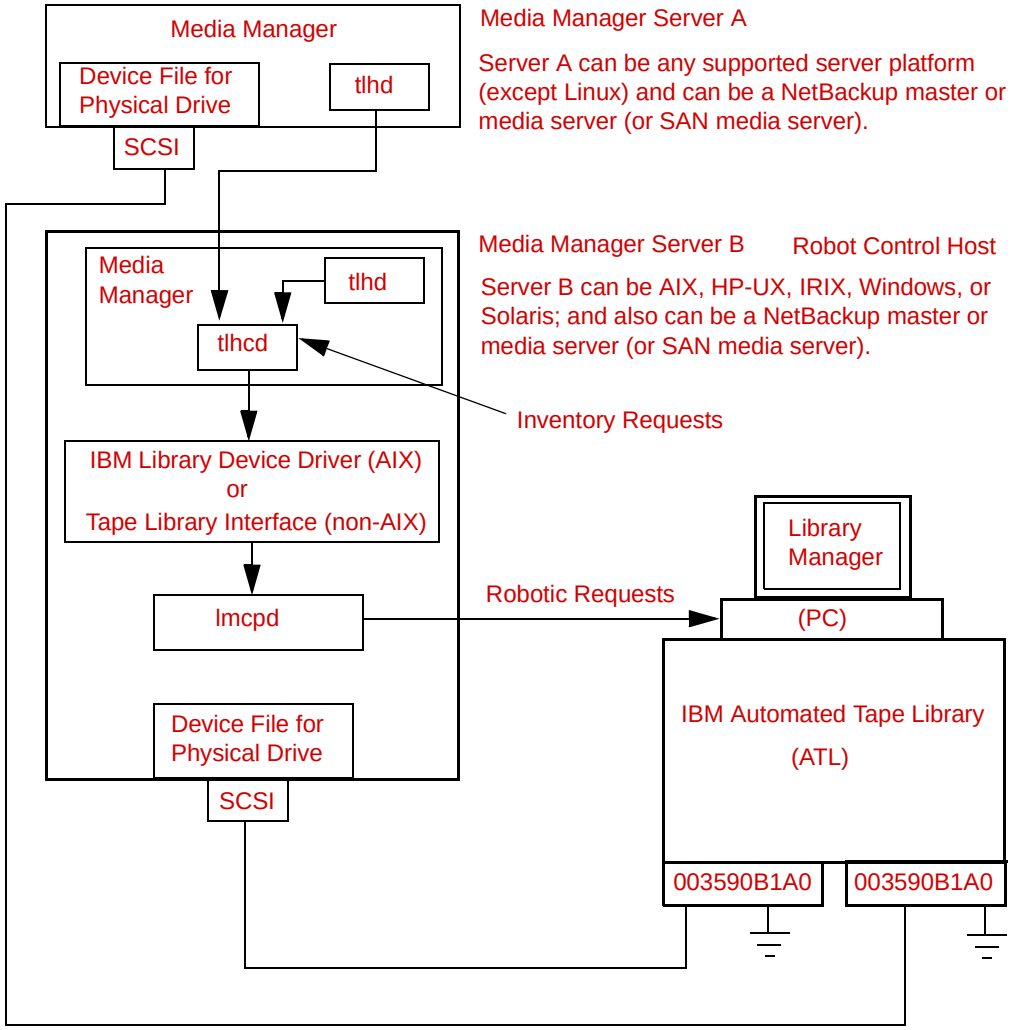

Component	Description
Media Manager Server	This host has Media Manager software and acts as a client to the ATL through the Library Manager Control Point daemon (`lmcpd`). Media Manager's device daemon, `ltid`, forwards mount and dismount requests to the Tape Library Half-inch daemon (`tlhd`).
Tape Library Half-inch daemon (`tlhd`)	This daemon resides on a Media Manager server and passes mount and dismount requests to the Tape Library Half-inch control daemon (`tlhcd`) on the robotic control host.
Tape Library Half-inch control daemon (`tlhcd`)	This daemon receives mount or dismount requests from `tlhd`, or robot inventory requests through an external socket interface. `tlhcd` must reside on the same system that communicates with `lmcpd` by using the IBM Library Device Driver interface (on AIX) or IBM Tape Library system calls (on non-AIX).
Library Manager Control Point daemon (`lmcpd`)	A component of IBM ATL support. This software handles all communications with the Library Manager and must be running on any system from which the Automatic Tape Library is directly controlled.
Library Manager	A component of IBM ATL support that provides control of the robotics and robotic library. This is a PC that is usually located within the robot cabinet.
IBM Automated Tape Library (ATL)	An IBM physical library under automated robotic control.

Media Requests for a TLH Robot

A request for media in a TLH robot in an IBM Automated Tape Library begins in the same manner as other media requests. The Media Manager device daemon (`ltid`) receives the request and queries the Media Manager volume daemon (`vmd`) for the location of the media. The volume daemon, in this case, returns only the robot number and type for the TLH robot, since Media Manager does not manage slot information for media in a TLH robot.

`ltid` verifies that the type and density of the requested volume are compatible. Next, `ltid` checks its internal tables (these tables are based on the device databases) to determine if there is an available drive and sends a mount request to the TLH daemon (`tlhd`). This daemon passes the request to the TLH control daemon (`tlhcd`).

`tlhcd` resides on the host that has the Automatic Tape Library. This can be the same host where `tlhd` is running or another host. If the Media Manager server is an AIX system, the control daemon communicates with the Library Manager Control Point daemon (`lmcpd`) by using the Library Device Driver interface. If the Media Manager server is a non-AIX system, such as Solaris, the control daemon communicates with `lmcpd` through Tape Library system calls from an application library interface.

`lmcpd` passes the information to the Library Manager, which then locates the media and directs the TLH robotics to mount the media in the drive. When the host (where Media Manager is installed) receives a success response from the Library Manager, it allows NetBackup to start sending data to the drive.

Configuring Robotic Control

When adding TLH robotic control to Media Manager ensure that the following are true:

- The IBM Automated Tape Library is physically connected and configured correctly.

  For information on configuring the IBM components of the Automated Tape Library, see the IBM SCSI Tape Drive, Medium Changer, and Library Device Drivers Installation and User's Guide (or any related publications).

  For information on platform support for TLH robotic control, see the NetBackup release notes and the VERITAS support web site (`http://www.support.veritas.com`).

- You are using a recommended firmware version for the Automated Tape Library. Visit the VERITAS support web site to locate the recommended levels.

Robotic Control on an AIX System

The following topics explain the steps needed for configuring robotic control when the media server (or SAN media server) is an AIX system.

Determine the Path to the LMCP Device File

Use the Library Manager Control Point (LMCP) device file as the robotic device file in Media Manager. This file is set up when the Automated Tape Library is first configured.

Use the `lsdev` command (or `smit`) to determine the LMCP device file.

The following example uses the `lsdev` command:

```
/etc/lsdev -C | grep "Library Management"
```

The following is the output from this command:

```
lmcp0      Available          LAN/TTY Library Management Control Point
```

Verify Library Communications

After you determine the path to the LMCP device file, verify library communications through the IBM-provided `mtlib` interface. Resolve all errors before attempting to configure IBM 3494 support in Media Manager.

To verify communications with a specific library, specify the Library Manager Control Point device file with the `mtlib` command. For example, if the LMCP device path is `/dev/lmcp0`, the following command verifies communication with the library:

```
/usr/bin/mtlib -l /dev/lmcp0 -qL
```

The following is the output from this command:

```
Library Data:
   state..................... Automated Operational State
                              Dual Write Disabled
   input stations............1
   output stations...........1
   input/output status.......ALL input stations empty
                              ALL output stations empty
   machine type..............3494
   sequence number...........11398
   number of cells...........141
   available cells...........129
   subsystems................2
   convenience capacity......30
   accessor config...........01
   accessor status...........Accessor available
                              Gripper 1 available
                              Gripper 2 available
                              Vision system operational
   comp avail status.........Primary library manager installed.
                              Primary library manager available.
                              Primary hard drive installed.
                              Primary hard drive available.
                              Convenience input station installed.
                              Convenience input station available.
                              Convenience output station installed.
                              Convenience output station available.
   avail 3490 cleaner cycles..0
```

```
avail 3590 cleaner cycles..92
```

Configure the Robotic Device File

Configure the robotic path as explained in "Configuring Storage Devices" on page 17. When the configuration is complete you can view the robotic device information.

The following example uses `tpconfig -d` to view the robotic device information. In this example, the first two drives shown are standalone drives. The drive with drive index 31 is under TLH robotic control and the drive with drive index 78 is under TL4 control.

```
# /usr/openv/volmgr/bin/tpconfig -d

Index  DriveName            DrivePath      Type    Shared     Status
*****  *********            **********     ****    ******     ******
  5    DRIVE0               /dev/rmt4.1    hcart     No        DOWN
 13    DRIVE2               /dev/rmt8.1    hcart     No        DOWN
 31    DRIVE1               /dev/rmt12.1   hcart     No        DOWN
        TLH(8)  IBM Device Number = 003590B1A00
 78    DRIVE1               /dev/rmt11.1   4mm       No        UP
        TL4(77) Definition    DRIVE=1
Currently defined robotics are:
  TL4(77)    robotic path = /dev/ovpass0, volume database host = maui
  TLH(8)    LMCP device path = /dev/lmcp0, volume database host = maui
Standalone drive volume database host = maui
```

In this example, note the following line:

```
  TLH(8)    LMCP device path = /dev/lmcp0, volume database host = maui
```

Where `/dev/lmcp0` is the path to the robotic device file and `maui` is the volume database host for this robot.

Robotic Control on a Non-AIX System

The following topics explain the steps for configuring robotic control when the media server is not an AIX UNIX system.

Determine the Library Name

Use the library name instead of the robotic device file when configuring in Media Manager. This name is set up when the Automated Tape Library is first configured (see your IBM system documentation). The library name is configured in the `/etc/ibmatl.conf` file and you determine the library name by viewing the file.

The following is an example entry in that file:

```
3494AH          176.123.154.141         ibmpc1
```

Where:

- `3494AH` is the library name.
- `176.123.154.141` is the IP address of the PC workstation that is running the Library Manager software.
- `ibmpc1` is the host name of the PC workstation that is running the Library Manager software.

Verify Library Communications

After you determine the library name, verify library communications through the IBM-provided `mtlib` interface. Resolve all errors before attempting to configure IBM 3494 (TLH) support in Media Manager.

To verify communications with a specific library, specify the library name with the `mtlib` command. For example, if the library name is 3494AH, the following command verifies communications with the library:

```
/usr/bin/mtlib -l 3494AH -qL
```

The following is the output from this command:

```
Library Data:
state......................Automated Operational State
                           Dual Write Disabled
input stations.............1
output stations............1
input/output status........ALL input stations empty
                           ALL output stations empty
machine type...............3494
sequence number............11398
number of cells............141
available cells............129
subsystems.................2
convenience capacity.......30
accessor config............01
accessor status............Accessor available
                           Gripper 1 available
                           Gripper 2 available
                           Vision system operational
comp avail status......... Primary library manager installed.
                           Primary library manager available.
                           Primary hard drive installed.
                           Primary hard drive available.
                           Convenience input station installed.
```

```
                                Convenience input station available.
                                Convenience output station installed.
                                Convenience output station available.
avail 3490 cleaner cycles..0
avail 3590 cleaner cycles..92
```

Configure the Robotic Device File

Configure the robotic path as explained in "Configuring Storage Devices" on page 17. When the configuration is complete you can view the robotic device information.

The following example uses `tpconfig -d` to view the robotic device information. This example has one TLH drive and one TLD drive.

```
/usr/openv/volmgr/bin/tpconfig -d

Index  DriveName           DrivePath      Type    Shared    Status
*****  *********          **********     ****    ******    ******
  6    DRIVE2             /dev/rmt/17cbn  hcart    No        UP
        TLH(0) IBM Device Number = 003590B1A00
 55    DRIVE1             /dev/rmt/15cbn  dlt      No        UP
        TLD(5) Definition   DRIVE=1
Currently defined robotics are:
  TLH(0)     library name = 3494AH, volume database host = grozer
  TLD(5)     robotic path = /dev/sg/c2t0l0, volume database host =
                                                                 grozer
Standalone drive volume database host = grozer
```

In this example, note the following line:

```
  TLH(0)     library name = 3494AH, volume database host = grozer
```

Where `3494AH` is the library name and `grozer` is the volume database host for this robot.

Configuring Drives for TLH Robots

The TLH robot has half-inch cartridge tape drives, usually with a SCSI interface, and you use the same methods to create or identify device files for these drives as for other drives. Refer to the system documentation for your platform and operating system for details on physically adding drives to your robots. The Media Manager device configuration guide has information on configuring device files.

See "Configuring Storage Devices" on page 17 for instructions on adding drives to your Media Manager configuration.

Caution When adding drives to Media Manager, it is important to assign the correct IBM device number to each drive. If the IBM device number is incorrect, tape mounts or backups may fail.

Use the Media Manager TLH test utility to determine the TLH drive designations. The following example uses `tlhtest` and shows which drives in the robot are under Media Manager control:

```
/usr/openv/volmgr/bin/tlhtest -r /dev/lmcp0
```

The following is the output from `tlhtest` (the user entered the `drstat` command on the third line). You would use 003590B1A00 and 003590B1A01 when adding these drives in Media Manager.

```
Opening /dev/lmcp0
Enter tlh commands (? returns help information)
drstat
Drive information:
  device name:            003590B1A00
  device number:          0x156700
  device class:           0x10 - 3590
  device category:        0x0000
  mounted volser:         <none>
  mounted category:       0x0000
  device states:          Device installed in ATL.
                          Dev is available to ATL.
                          ACL is installed.
Drive information:
  device name:            003590B1A01
  device number:          0x156600
  device class:           0x10 - 3590
  device category:        0x0000
  mounted volser:         <none>
  mounted category:       0x0000
  device states:          Device installed in ATL.
                          Dev is available to ATL.
                          ACL is installed.
QUERY DEVICE DATA complete
```

If the robotic control is configured on a non-AIX UNIX server using the IBM Automated Tape Library support, use the library name as configured in `/etc/ibmatl.conf` in place of the LMCP device path on the call to `tlhtest`.

Cleaning Drives

The IBM ATL interface does not allow applications to request or configure drive cleaning. For this reason, you cannot assign cleaning tapes to a TLH robot in the Media Manager volume configuration. You must configure drive cleaning by using an IBM administrative interface.

Adding Volumes

▼ **To add volumes**

1. Add barcode labels to the media and insert the media into the robot using the media access port.

   The Library Manager reads the barcodes and classifies the media by media type. A category is assigned to each volume. Some volume categories will restrict application access to certain volumes. Volume locations are tracked by the Library Manager.

2. Define the media to Media Manager by using the ATL volume IDs as media IDs. To accomplish this, do one of the following:

   - Update the volume configuration using the robot inventory function, as explained under "Updating the Volume Configuration for a Robot" on page 174.
   - Add new volumes as explained under "Adding New Volumes" on page 128.

   Since the ATL volume IDs and barcodes are the same, Media Manager has the barcodes for the media. Notice that you do not enter slot location because that information is kept by the ATL software.

3. Use **Show Contents** and **Compare Contents with Volume Configuration** from the Robot Inventory dialog of the **Media** node to verify your configuration.

Removing Volumes

▼ **To remove volumes**

1. Physically remove the media from the library using one of the following:

   - An IBM Library Manager interface.
   - The `eject` command in the Media Manager `tlhtest` utility.

- The NetBackup Administration Console (see "Methods for Ejecting Volumes From a Robot" on page 126).
- The `vmchange` command (see the NetBackup commands for UNIX reference).

2. If you are using the `vmchange` command or the NetBackup Administration Console (see step 1), you can skip this step.

   Update the Media Manager volume database to indicate the new location of the media as being standalone. To accomplish this, do one of the following:

   - Update the volume configuration, as explained in "Updating the Volume Configuration for a Robot" on page 174.
   - Move volumes as explained in "Moving Volumes" on page 141.

   Otherwise, Media Manager is not aware that the media is missing and may issue mount requests for it. The result is an error such as Misplaced Tape.

   It does not matter if you physically move media from one location to another within the robot. The Automated Tape Library will find the media when Media Manager requests it.

Robot Inventory Operations

Media Manager considers a TLH robot as one that supports barcodes. The following sequence explains what occurs when you select an operation that requires a robotic inventory for a TLH robot:

1. Media Manager requests volume information from the Library Manager through the Library Manager Control Point daemon.

2. The Library Manager responds by providing a list of volume IDs and volume attributes from its database. Media Manager then filters out volume categories that cannot be used and displays a list of volumes obtained along with a translated version of the volume's media type. The media type is based upon the attributes that were returned.

   The following table shows an example of the types of information that Media Manager receives:

TLH Volume ID	TLH Media Type
PFE011	3480
303123	3490E

TLH Volume ID	TLH Media Type
CB5062	3590J
DP2000	3590K

3. Media Manager translates the volume IDs into media IDs and barcodes. In the previous table, volume ID PFE011 becomes media ID PFE011 and the barcode for that media ID is also PFE011.

4. If the operation does not require updating the volume configuration, Media Manager uses the media type defaults for TLH robots when it creates its report.

   "How Contents Reports for API Robots are Generated" on page 170 shows an example of this report.

5. If the operation requires updating of the volume configuration, Media Manager maps the TLH media types to the Media Manager media types as explained in "Media Type Mappings Tab (Advanced Options)" on page 201.

   The Update Volume Configuration report for an TLH robot is similar to the figure shown for an API robot in "Procedure To Update the Volume Configuration" on page 177.

Robotic Inventory Filtering

If your site has many volumes configured, but you only want NetBackup to use a subset of them, you may be able to use inventory filtering.

The IBM Library Manager maintains the concept of a volume category, which can be used to classify volumes into pools, including pools by application.

On the Media Manager server where the inventory request will be initiated, you can add an `INVENTORY_FILTER` entry in the `vm.conf` file. The format for this entry follows:

`INVENTORY_FILTER` = `TLH` *robot_number* `BY_CATEGORY` *value1* `[`*value2* `. . .]`

where

- *robot_number* is the robot number.
- *value1* is a filter value of type IBM category (if *filter_type* = `BY_CATEGORY`).
- *value2* is a second filter value (up to 10 filter values are allowed).

For example:

```
INVENTORY_FILTER = TLH 0 BY_CATEGORY 0xcdb0
```

ADIC Distributed AML Server/Scalar Distributed Library Controller F

Note *This appendix applies only to NetBackup Enterprise Server.*

Media Manager provides support for robotics under control of either an ADIC Distributed AML Server (DAS) or a Scalar Distributed Library Controller (SDLC), including those in the ADIC Automated Media Library (AML) family. See "Sample TLM Configuration" on page 507.

Portions of this appendix use the term *DAS/SDLC* to refer to either of these ADIC software products. Other portions use the terms *DAS* or *SDLC* when referring to a particular ADIC software product.

Under Media Manager, robotic support for these robots is classified as Tape Library Multimedia (TLM) and these robots are also API robots (the robot manages its own media). Support for these devices is different than for other types of Media Manager robotic control and this appendix provides an overview of those differences.

Sample TLM Configuration

The following figure and accompanying table show a possible configuration using Distributed AML Server software, and explain the major components in this sample configuration.

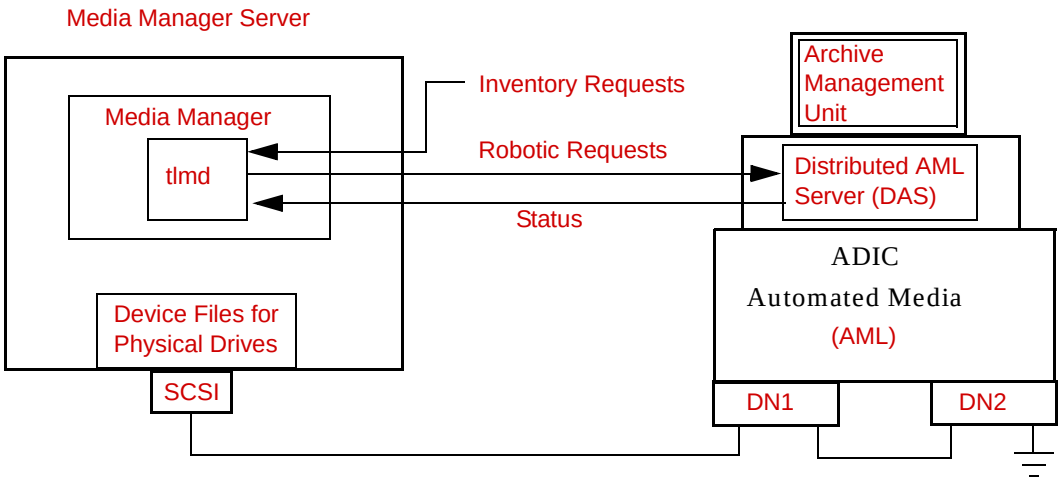

Component	Description
Media Manager Server	A host that has Media Manager software and acts as a client to the DAS/SDLC server. Media Manager's device daemon, `ltid`, forwards mount and dismount requests to the TLM daemon (`tlmd`).
TLM daemon (`tlmd`)	This daemon passes mount and dismount requests to the DAS/SDLC server and handles return status. `tlmd` also receives and handles robot inventory requests.
Archive Management Unit (AMU)	A PC running an IBM OS/2, Windows NT, or Windows 2000 operating system, usually located in or near the AML cabinet. The ADIC software runs on the AMU.
Distributed AML Server (DAS) Scalar Distributed Library Controller (SDLC)	These are two ADIC client/server software products that reside in the Archive Management Unit and provide shared access to the family of Automated Media Libraries (AML). The Media Manager robotic daemon (or TLM daemon) acts as a client to the DAS/SDLC server.
Automated Media Library (AML)	An ADIC multimedia robotic library.

Media Requests Involving a TLM Robot

A request for media in a TLM robot begins in the same manner as other media requests. The Media Manager device daemon, `ltid`, receives the request and queries the Media Manager volume daemon, `vmd`, for the location of the media. The volume daemon, in this case, returns only the robot number and type TLM robot. The Media Manager volume database does not manage slot information for media in a TLM robot.

`ltid` verifies that the type and density of the requested volume are compatible. Next, `ltid` checks its internal tables (these tables are based on the device databases) to determine if there is an available drive and sends a mount request to the TLM daemon, `tlmd`. This daemon passes the request to the DAS or SDLC server software (which resides in the Archive Management Unit).

The DAS/SDLC server locates the media and directs the robotics to mount the media in the drive. When the host (where Media Manager is installed) receives a success response from the server, it allows the requesting application (for example, NetBackup) to start sending data to the drive.

Note With TLM robotic control, the Media Manager server is considered to be a DAS/SDLC client and sends robotic control requests to the DAS/SDLC server. This relationship pertains only to the DAS/SDLC client/server model and is not related in any way to the concept of NetBackup servers or clients.

Configuring TLM Robotic Control

When configuring TLM robotic control for Media Manager, first ensure that the ADIC Automated Media Library has been physically connected and configured.

For information on initially configuring the ADIC components of the Automated Media Library, see the ADIC documentation. Pay close attention to the DAS or SDLC component, which is described in the ADIC installation and administration guides.

For information on platform support for TLM robotic control, see the NetBackup release notes.

Configuring TLM Drives on a DAS/SDLC Server

Before configuring drives for Media Manager, you must configure the DAS or SDLC server to allocate the desired drives to a specific DAS/SDLC client (the Media Manager server). The following topics pertain to this configuration.

Note See the ADIC documentation for detailed instructions on configuring the DAS/SDLC server.

Installing ADIC Software for the Client Component

Do the following to install ADIC software on UNIX servers:

▼ To install and configure ADIC software

❖ Install the ADIC library (`libaci.so`) in the operating system folder `/usr/lib`. The ADIC library is named `libaci.sl` on servers running HP-UX.

Configuring the DAS/SDLC Client Name

The DAS/SDLC client name required for the Media Manager server is entered in the configuration file on the DAS/SDLC server. It is important that this name is the same name being used by Media Manager, and that it is a valid client name.

By default the Media Manager server uses as its DAS/SDLC client name, the host name that it obtains from the `gethostname()` system call. This name is usually the one that you use for the client name in the configuration file on the DAS/SDLC server.

However, if this name is invalid for DAS/SDLC clients you will have to use another name. For example, DAS 1.30C1 does not allow hyphens in client names. If the host name (where Media Manager is installed) has a name such as dolphin-2, the DAS/SDLC server will not recognize it.

A similar problem exists if a Media Manager server's short host name is being used as the client name, but `gethostname()` returns the long host name.

▼ To resolve client name problems

1. Substitute a valid client name on the DAS/SDLC server. For example, use dolphin2.

2. Use this name in a `DAS_CLIENT` entry in the `/usr/openv/volmgr/vm.conf` file on the Media Manager server. These entries are of the form:

   `DAS_CLIENT` = *DASclientname*

   Where *DASclientname* is the name that you want Media Manager to use as its DAS/SDLC client name. In this example, this entry would be

   ```
   DAS_CLIENT = dolphin2
   ```

3. Stop and start the `ltid` daemon to enable the TLM daemon to use the new client name.

4. When the client names are correct, restart the DAS/SDLC server with the latest configuration file and then reallocate the drives to Media Manager.

Allocating TLM Drives on a DAS Server

When the client names are correct (see "Configuring the DAS/SDLC Client Name" on page 510), allocate the drives to the Media Manager server by using the `DASADMIN` administrative command.

The DAS administrative drive allocation commands are not available from the Media Manager TLM test utility interface. You must use a administrative interface on the DAS server or the DAS client administrative interface.

▼ To allocate TLM drives

The following example uses `DASADMIN` to allocate drives:

```
LD_LIBRARY_PATH=/usr/local/aci/lib
export LD_LIBRARY_PATH
DAS_SERVER=dasos2box
export DAS_SERVER
DAS_CLIENT=grouse
export DAS_CLIENT
cd /usr/local/aci/admin
./dasadmin listd
```

The following is sample output from this command:

```
==>listd for client:  successful
   drive: DN1  amu drive: 01  st: UP  type: N  sysid:
     client: grouse  volser:   cleaning 0  clean_count: 17
   drive: DN2  amu drive: 02  st: UP  type: N  sysid:
     client: mouse   volser:   cleaning 0  clean_count: 4
./dasadmin allocd
```

The following is sample output from this command:

```
==> usage: dasadmin allocd drive-name UP|DOWN clientname
```

(First allocate it DOWN on one client, then UP on another as in the following:)

```
./dasadmin allocd DN2 DOWN mouse
./dasadmin allocd DN2 UP grouse
```

Configuring TLM Drives on a SDLC Server

When the client names are correct (see "Configuring the DAS/SDLC Client Name" on page 510), configure the drives for the Media Manager server.

▼ **To configure TLM drives**

1. Start the SDLC console and choose **Configuration** > **Clients**.

   Enter the client name for the value of **Name**.

   Enter the network host name for the value of **Client Host Name**.

2. Select the **Drive Reservation** tab on the client and choose **UP** for the drives that you want to allocate to this client.

Configuring TLM Drives in Media Manager

A TLM robot can have several different types of drives, usually with a SCSI interface, and you use the same methods to create device files for these drives as for other drives. If the drives are SCSI and connect to the robot through a control unit, you must specify the logical unit number (lun) for each drive, as they share the same SCSI ID.

Refer to the system documentation for your platform and operating system for details on configuring drives and logical unit numbers. The Media Manager device configuration guide also has information on configuring device files.

See "Configuring Storage Devices" on page 17 for instructions on how to add the drives to a Media Manager configuration.

Caution When adding drives to Media Manager, it is especially important to assign the correct DAS/SDLC drive name to each drive. If the drive name is incorrect, tape mounts or backups may fail.

Use the Media Manager TLM test utility to determine the DAS/SDLC drive designations. The following example uses `tlmtest`:

```
/usr/openv/volmgr/bin/tlmtest -r dasos2box
```

The following is the output from this utility (the user entered the `drstat` command on the third line).

```
Current client name is 'grouse'.
Enter tlm commands (? returns help information)
drstat
Drive 1: name = DN1, amu_name = 01, state = UP, type = N,
         client = grouse, volser = , cleaning = NO, clean_count = 17
```

```
Drive 2: name = DE3, amu_name = 03, state = UP, type = E,
         client = grouse, volser = , cleaning = NO, clean_count = 480
Drive 3: name = DE4, amu_name = 04, state = UP, type = E,
          client = grouse, volser = , cleaning = NO, clean_count = 378
DRIVE STATUS complete
```

This output indicates that DAS/SDLC drive names DN1, DE3, and DE4 should be used. It also shows that grouse is the client name that is being used for the Media Manager server.

Configuring Shared TLM Drives

Use one of the following procedures depending on which ADIC client/server software you are using.

Configuring the ADIC DAS Server

Using TLM robots with SSO requires that the ADIC DAS server be configured to allow drives to be allocated simultaneously to all NetBackup media servers that are sharing the drives (for ADIC software, these servers are considered to be clients). DAS server software version 3.01.4 or higher is needed.

▼ To configure the DAS server

This example has two UNIX media servers (server_1 has IP address xxx.xxx.xxx.xxx and server_2 has IP address yyy.yyy.yyy.yyy).

In this example, the client name is set to NetBackupShared, but can be any name without special characters.

1. Modify the DAS server's `\ETC\CONFIG` file to create a shared client entry.

   ```
   client client_name = NetBackupShared
   # ip address = 000.000.000.000
   hostname = any
   ```

2. Place the IP addresses of all media servers that will use the shared client entry in the `\MPTN\ETC\HOSTS` file on the DAS server.

   ```
   xxx.xxx.xxx.xxx server_1
   yyy.yyy.yyy.yyy server_2
   ```

3. Using the DASADMIN interface, choose **UP** for the drives that you want to allocate to the shared client (NetBackupShared).

4. On each of the media servers that are sharing the drives, create an entry in the `vm.conf` file with the shared DAS client name, such as the following:

   ```
   DAS_CLIENT = NetBackupShared
   ```

5. Test the DAS configuration using `robtest` and `tlmtest`. Set the client name (use `client NetBackupshared` in `tlmtest`) and run the drive status command (`drstat`).

   On Windows clients (media servers), the client name is obtained from the `DAS_CLIENT` environment variable so the `client` command is not needed in `tlmtest`.

Configuring the ADIC SDLC Server

Using TLM robots with SSO requires that the ADIC SDLC server be configured to allow drives to be allocated simultaneously to all NetBackup media servers that are sharing the drives (to ADIC software, these servers are considered to be clients). SDLC software version 2.3 or higher is needed.

▼ To configure the SDLC server

In this example, the client name for the shared client is set to NetBackupShared, but can be any name without special characters.

1. Start the SDLC console and choose **Configuration** > **Clients**.

   Enter NetBackupShared for the value of **Name**.

   Enter any for the value of **Client Host Name**.

2. Select the **Drive Reservation** tab on the shared client (NetBackupShared) and choose **UP** for the drives that you want to allocate to the shared client.

3. On UNIX clients (media servers) that are sharing the drives, create an entry in the `vm.conf` file with the shared client name, such as the following:

   ```
   DAS_CLIENT = NetBackupShared
   ```

   On Windows clients (media servers) that are sharing the drives, set the `DAS_CLIENT` Windows operating system environment variable to NetBackupShared.

4. Test the SDLC configuration using `robtest` and `tlmtest`. Set the client name (use `client NetBackupshared` in `tlmtest`) and run the drive status command (`drstat`).

On Windows clients (media servers), the client name is obtained from the `DAS_CLIENT` environment variable so the `client` command is not needed in `tlmtest`.

Using the Device Configuration Wizard in Media Manager

The following procedure uses the Device Configuration wizard to configure drives in a SSO configuration. Using this procedure can significantly reduce the amount of manual configuration required in an SSO environment. For example, if you have 20 drives shared on 30 hosts, these configuration steps require just 20 device paths to be manually configured, instead of 600 device paths.

During the setup phase, the wizard will attempt to discover the tape drives available; and for the robot types where serialization is available, the positions of the drives within the library. This wizard does not obtain drive serial numbers from the TLM robotic library control interface, so some manual configuration is required.

▼ To use the Device Configuration wizard

1. Run the Device Configuration wizard on one of the hosts where drives in an TLM-controlled library are attached. Allow the drives to be added as standalone drives.

2. Add the TLM robot definition and update each drive to indicate its appropriate position in the robot. Make each drive robotic.

   See "Correlating Device Files to Physical Drives When Adding Drives" on page 329 for help in determining the correct addressing and verifying the drive paths.

3. After the drive paths have been verified on one host, re-run the wizard and specify that all hosts that have TLM drives in the library should be scanned.

   The wizard will add the TLM robot definition and the drives to the remaining hosts with correct device paths (assuming that the devices and their serial numbers were successfully discovered and that the drive paths were correctly configured on the first host).

The use of SANs (including switches rather than direct connection) can increase the possibility of errors. If you are experiencing errors, you can manually define the tape drive configuration by using the NetBackup Administration Console or the command line.

Care must be taken to avoid any errors. With shared drives, the device paths must be correct for each server. Also ensure that the drives are defined correctly to avoid errors.

Providing Common Access to Volumes

If you use the same volume database for all Media Manager servers (recommended by VERITAS), each server must have access to the same sets of volumes (volsers) in the DAS/SDLC configuration. Otherwise, when you perform an update volume configuration from one of the servers, the volumes that are not configured for that server will be logically moved to a standalone residence.

As a test, you can inventory a TLM robot from each Media Manager server and compare the results. If all the inventory reports are not the same, correct the DAS/SDLC configuration. Then, perform a shutdown on the DAS/SDLC server and restart.

Adding Volumes

▼ **To add media**

1. Add barcode labels to the media and insert the media into the library using the media access port (insert area).

2. Do one of the following to empty the media access port and have the AMU Archive Management Software read the barcodes, classify the media by media type, and track storage cell locations for the media:

   - Select the robot inventory update inventory function and select **Empty media access port prior to update**. In step 3 continue using the robot inventory function to update the volume configuration.
   - Issue the DAS insert directive from a DAS administrative interface. You can obtain the insert area name from the DAS configuration file.
   - Issue the DAS insert directive from the Media Manager utility, `tlmtest`. You can obtain the insert area name from the DAS configuration file.

3. Define the media to Media Manager by using the DAS/SDLC volsers as media IDs. To accomplish this, do one of the following:

   - Update the volume configuration using the robot inventory function, as explained under "Updating the Volume Configuration for a Robot" on page 174.
   - Add new volumes as explained under "Adding New Volumes" on page 128.

   Since the DAS/SDLC volsers and barcodes are the same, Media Manager now also has the barcodes for the media. Notice that you do not enter slot location because that information is kept by the ADIC software.

4. Use **Show Contents** and **Compare Contents with Volume Configuration** from the Media and Device Management Robot Inventory dialog to verify your configuration and maintain consistency between the DAS/SDLC database and the Media Manager volume configuration. That is, update the Media Manager configuration when media has moved or may have moved.

Removing Volumes

▼ To remove media

1. Physically remove the media from the library using one of the following:
   - A DAS/SDLC administrative interface.
   - The `eject` command in the Media Manager `tlmtest` utility.
   - The NetBackup Administration Console (see "Methods for Ejecting Volumes From a Robot" on page 126).
   - The `vmchange` command (see the NetBackup commands for UNIX reference).
2. If you are using the `vmchange` command or the NetBackup Administration Console (see step 1), you can skip this step.

   Update the Media Manager volume database to indicate the new location of the media as being standalone. To accomplish this, do one of the following:
   - Update the volume configuration, as explained in "Updating the Volume Configuration for a Robot" on page 174.
   - Move volumes as explained in "Moving Volumes" on page 141.

   Otherwise, Media Manager is not aware that the media is missing and may issue mount requests for it. The result is an error such as "Misplaced Tape".

   It does not matter if you physically move media from one location to another within the robot. The DAS/SDLC AMU will find the media when Media Manager requests it.

Robot Inventory Operations

Media Manager considers a TLM robot as one that supports barcodes. The following sequence explains what occurs when you select an operation that requires a robotic inventory for a TLM robot:

1. Media Manager requests volume information from the DAS or SDLC server through a DAS/SDLC application library call.

2. The server responds by providing a list of volume IDs and associated information from its database. Media Manager filters out volumes that are not occupied in their home cell locations or in drives, then displays a list of volumes obtained along with their media types according to the DAS/SDLC server.

   The following table indicates an example of information displayed by Media Manager:

TLM Volser	TLM Media Type
A00250	3480
J03123	3590
DLT001	DECDLT
MM1200	8MM
NN0402	4MM
002455	UNKNOWN

3. Media Manager translates the volsers directly into media IDs and barcodes. In the previous table, volser A00250 becomes media ID A00250 and the barcode for that media ID is also A00250.

4. If the operation does not require updating the volume configuration, Media Manager uses the media type defaults for TLM robots when it creates its report.

   "How Contents Reports for API Robots are Generated" on page 170 shows an example of this report.

5. If the operation requires updating the volume configuration, Media Manager maps the TLM media types to the Media Manager media types as explained in "Media Type Mappings Tab (Advanced Options)" on page 201.

   The Update Volume Configuration report for an TLM robot is similar to the figure shown for an API robot in "Procedure To Update the Volume Configuration" on page 177.

Fujitsu Library Management Facility (LMF) G

Note *This appendix applies only to NetBackup Enterprise Server.*

Media Manager provides support for robotics under control of the Fujitsu Library Management Facility (LMF), including the Fujitsu F6458 / M2498 Magnetic Tape Library.

Under Media Manager, robotic support for Library Management Facility robots is classified as LMF and these robots are also considered API robots (the robot manages its own media). Support for these devices is different than for other types of Media Manager robotic control. This appendix provides an overview of those differences.

Sample LMF Configurations

The following figures and accompanying table show possible LMF configurations, and explain the major components in these sample configurations.

In these configurations, the Media Manager servers and the server where LMF is installed (as shown in the figure "Robotic Control on Host with LMF Client" on page 522) must be Sun Solaris systems.

Robotic Control Host Connecting Directly to Robot

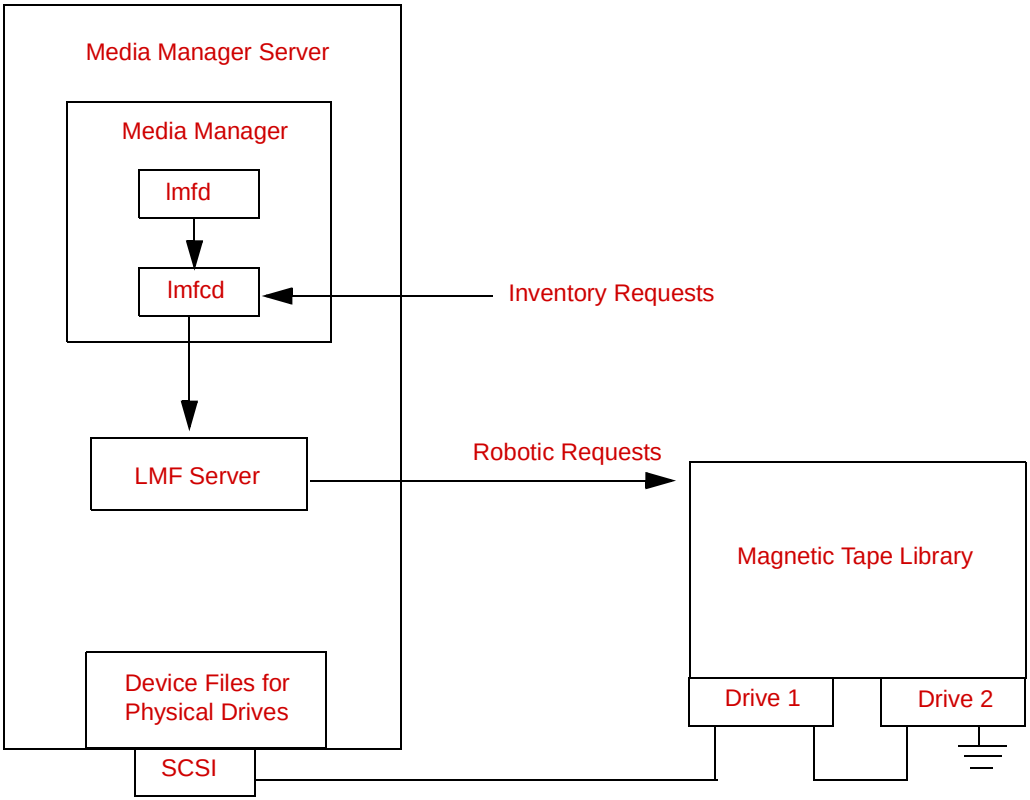

Robotic Control and Robot Connection on Separate Hosts

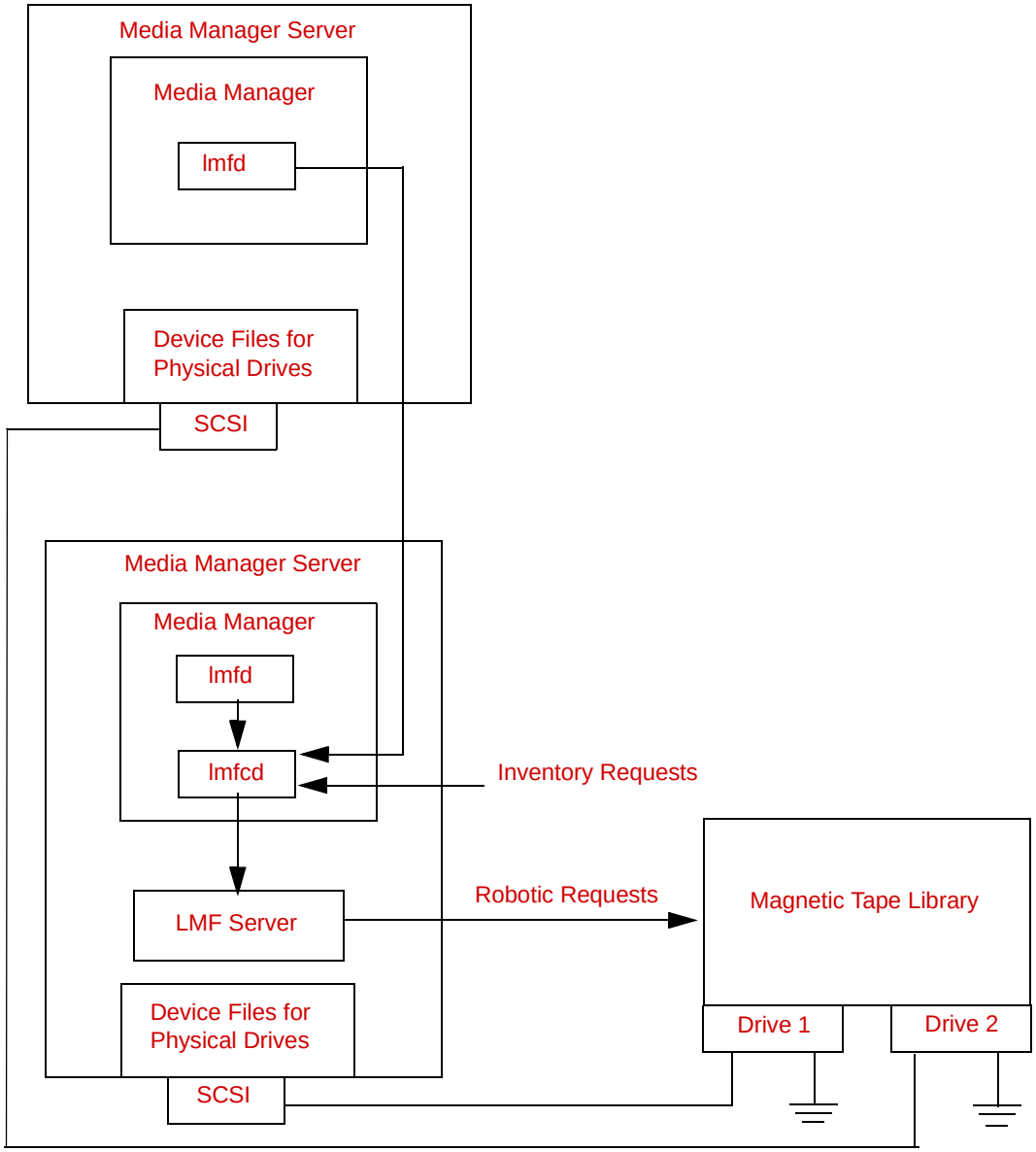

Robotic Control on Host with LMF Client

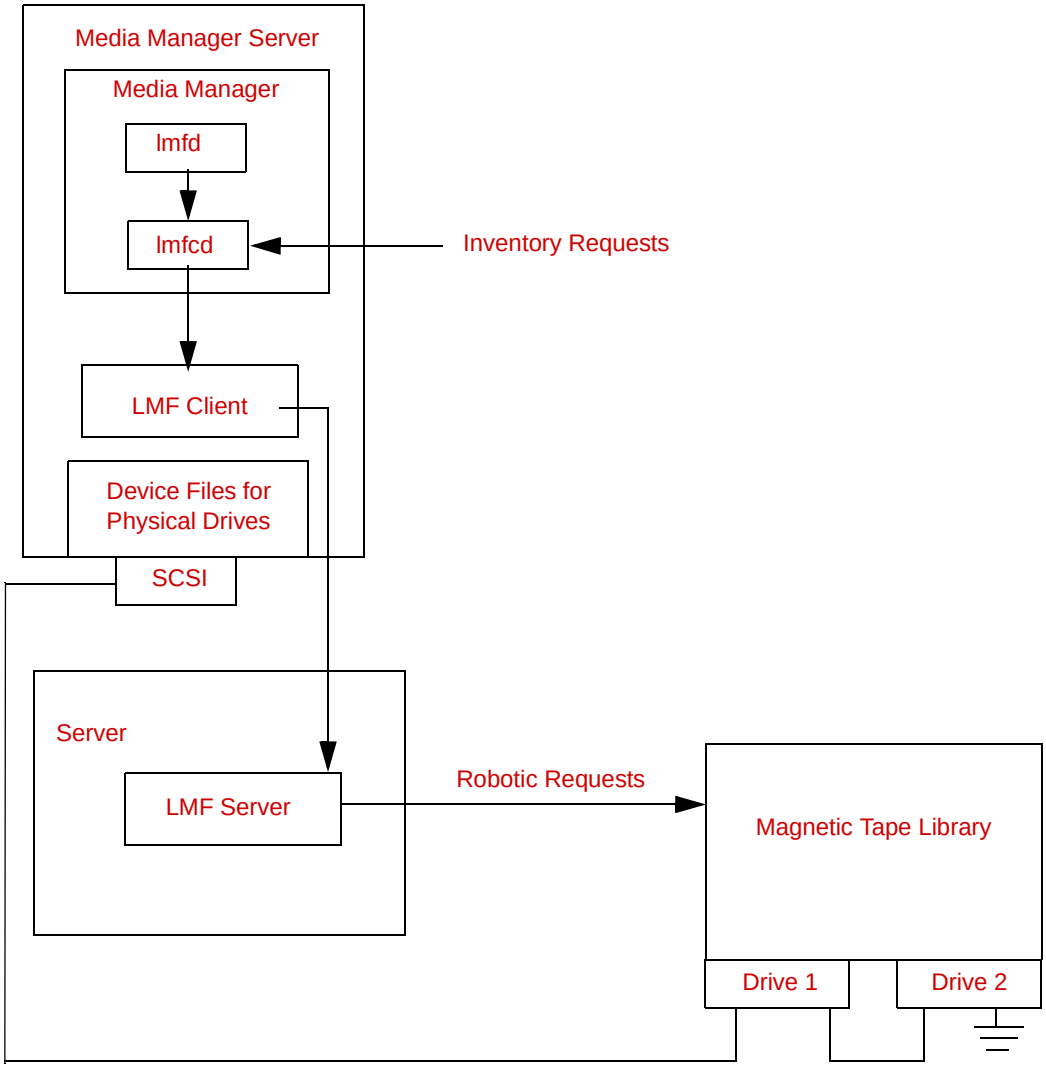

Component	Description
Media Manager Server	A host that has Media Manager software and accesses the Library Management Facility through the LMF Server or LMF Client. The Media Manager device daemon, `ltid`, forwards mount and dismount requests to the LMF daemon (`lmfd`).
LMF daemon (`lmfd`)	This daemon resides on a Media Manager server and passes mount and dismount requests to the LMF control daemon (`lmfcd`).
LMF control daemon (`lmfcd`)	This control daemon receives mount or dismount requests from `lmfd` or robot inventory requests through an external socket interface. This daemon must reside on a host that is running the LMF Server or the LMF Client.
LMF Server	The LMF Server software sends mount and dismount requests to the Magnetic Tape Library.
LMF Client	The LMF Client software transfers mount and dismount requests to the LMF Server software.
Magnetic Tape Library	A physical library under automated robotic control, including the Fujitsu F6458 / M2498 Magnetic Tape Library.

Media Requests Involving an LMF Robot

A request for media in an LMF robot in a Library Management Facility Magnetic Tape Library begins in the same manner as other media requests. The Media Manager device daemon, `ltid`, receives the request and queries the Media Manager volume daemon, `vmd`, for the location of the media. The volume daemon returns only the robot number and type, since the volume database does not store slot information for media in a LMF robot.

`ltid` verifies that the type and density of the requested volume are compatible. Next, `ltid` checks its internal tables (these tables are based on the device databases) to determine if there is an available drive and sends a mount request to the LMF daemon (`lmfd`). This daemon passes the request to the LMF control daemon (`lmfcd`).

The LMF control daemon resides on an LMF Server host or LMF Client host. This can be the host where `lmfd` is running or another host. The control daemon communicates with the Magnetic Tape Library through the LMF Server program interface or the LMF Client program interface.

The LMF Server passes information to the Magnetic Tape Library, which then locates the media and directs the robotics to mount the media in the drive. When the host (where Media Manager is installed) receives a successful response from the LMF Server or LMF Client, it allows the requesting application (for example, NetBackup) to start sending data to the drive.

Configuring Robotic Control

The following topics explain the steps needed to configure LMF robotic control.

Robotic control can be through an LMF Server or LMF Client. Some functions (inject and eject) are not available when running through an LMF Client.

The library name is used to identify the robot, when configuring robotic control in Media Manager.

Determining the Library Name

The library name is set up when the robot is configured, using the Fujitsu `lmadmin` command. You can also list the library name using the `lmadmin -r` command. Sample output from this command follows:

```
Displaying all parameters
system parameters
    times of load retry                                   = 3
    time of waiting for setting cartridge to entry(sec.) = 30
    polling interval of DEE operation(min.)               = 30
    auto cleaning                                         = enable
    network service name                                  = lmf
    journal of volume management database                 = disable

  library name = KOALA0
    library model                                   = F6458
    library ID                                      = 0005
    special file of the accessor                    = /dev/ftla/0
    frame setup
FRAME Z       FRAME       DRIVE                        HOST NAME /
CODE  ADDRESS TYPE       NAME     LOGICAL DRIVE NAME SPECIAL FILE NAME
02    00      ACCESSOR    -         -                 -
02    01      CAS         -         -                 -
21    00      WALL CELL   -         -                 -
21    01      DRIVE       drive#01  LIB001DRV001      /dev/rmt/3
                          drive#02  LIB001DRV002      /dev/rmt/1
41    00      -           -         -                 -
41    01      -           -         -                 -
```

Verifying Library Communications

When you determine the library name, you can verify library communications using the following Fujitsu command. You should resolve any errors before attempting to configure Fujitsu F6458 / M2498 Magnetic Tape Library (LMF) support in Media Manager.

```
lmdisplay -l KOALA0
```

Sample output from this command follows:

```
volume database                 = normal
journal of volume
  management database           = not use
LMF log file                    = normal
library                         = KOALA0
  machine type                  = F6458
  library logical status        = available
  ACC status                    = active
  barcode reader                = normal
  ARC                           = active
  reserve cell #0               = cartridge not exist
  reserve cell #1               = cartridge not exist
  reserve cell #2               = cartridge not exist
  reserve cell #3               = cartridge not exist
  reserve cell #4               = cartridge not exist
  reserve cell #5               = cartridge not exist
  reserve cell #6               = cartridge not exist
  reserve cell #7               = cartridge not exist
  ACC SCSI path
    special file name(main)     = /dev/ftla/0
    logical status(main)        = available
  CAS
    logical status
      entry                     = available
      exit                      = available
    entry
      status                    = empty
      entry No.1                = normal
      entry No.2                = normal
      entry No.3                = normal
      entry No.4                = normal
      entry No.5                = normal
      entry No.6                = normal
      entry No.7                = normal
      entry No.8                = normal
      entry No.9                = normal
      entry No.10               = normal
    exit
```

```
      status                    = empty
      exit No.1                 = normal
      exit No.2                 = normal
      exit No.3                 = normal
      exit No.4                 = normal
      exit No.5                 = normal
      exit No.6                 = normal
      exit No.7                 = normal
      exit No.8                 = normal
      exit No.9                 = normal
      exit No.10                = normal
  FES status                    = cartridge not exist
  frame code                    = 02
  frame code                    = 21
    cleaning cartridge No.10    = use count:7
    cleaning cartridge No.11    = use count:7
    cleaning cartridge No.12    = use count:7
    cleaning cartridge No.13    = use count:6
    cleaning cartridge No.14    = not exist
    cleaning cartridge No.15    = not exist
    cleaning cartridge No.16    = not exist
    cleaning cartridge No.17    = not exist
    drive                       = drive#01
      logical drive name        = LIB001DRV001
      logical status            = available
      status                    = empty
    drive                       = drive#02
      logical drive name        = LIB001DRV002
      logical status            = available
      status                    = empty
  frame code                    = 41
```

Configuring Robotic Control

Configure the robotic path as explained in the chapter, "Configuring Storage Devices" on page 17. When the configuration is complete you can view the robotic device information.

The following example uses `tpconfig` to view the robotic device information.

```
/usr/openv/volmgr/bin/tpconfig -d
```

Sample output from this command follows. This example does not have any drives configured yet.

```
Currently defined robotics are:
  LMF(47)    library name = KOALA0, volume database host = dill
```

Configuring Drives for LMF Robots

The LMF robot has half-inch cartridge drives and you use the same methods to create device files for these drives as for other drives. Refer to the system documentation for your platform and operating system for details on physically adding drives to your host. The Media Manager device configuration guide also has information on configuring device files.

See "Configuring Storage Devices" on page 17 for instructions on how to add the drives to a Media Manager configuration.

Caution When adding drives to Media Manager, it is especially important to assign the correct robot drive number to each drive. If the robot drive number is incorrect, tape mounts or backups may fail.

Use the Media Manager LMF test utility (`lmftest`) to determine the mapping between the Media Manager drive designations and the LMF drive designations.

The following example uses `lmftest` and shows which drives in the robot are under Media Management control:

```
/usr/openv/volmgr/bin/lmftest -r KOALA0
```

The following is the output from this utility (the user entered the `drstat` command on the fifth line). You would use drive number 1 and 2 when adding these drives in Media Manager.

```
Opening robotic library: KOALA0
Drive=1 Name=LIB001DRV001
Drive=2 Name=LIB001DRV002
Enter lmf commands (? returns help information)
drstat
WARNING: Only changes made to the drive status during
         this test session are shown below.
Drive 1 information:
   Logical drive name:     LIB001DRV001
   Library name:           KOALA0
   Special file name:      /dev/rmt/3
   Drive logical status:   00000000
   Drive type:             0000000e
   Name of loaded volume:
Drive 2 information:
   Logical drive name:     LIB001DRV002
   Library name:           KOALA0
   Special file name:      /dev/rmt/1
   Drive logical status:   00000000
   Drive type:             0000000e
   Name of loaded volume:
```

```
QUERY DEVICE DATA complete
```

The following example uses `tpconfig -d` to display the configuration. Sample output from this command shows these two drives configured in Media Manager.

```
Index   DriveName              DrivePath      Type    Shared     Status
*****   *********              **********     ****    ******     ******
  0     DRIVE1                  /dev/rmt/3cbn  hcart     No         UP
         LMF(47) Definition      DRIVE=1
  1     DRIVE2                  /dev/rmt/1cbn  hcart     No         UP
         LMF(47) Definition      DRIVE=2

Currently defined robotics are:
  LMF(47)    library name = KOALA0, volume database host = dill
```

Cleaning Drives

The Fujitsu Library Management Facility interface does not allow applications (such as Media Manager) to request or configure drive cleaning. For this reason, you cannot assign cleaning tapes to an LMF robot in a Media Manager volume configuration.

You must configure drive cleaning using a Fujitsu administrative interface. Media Manager is designed to work with the Fujitsu LMF auto cleaning feature, whether auto cleaning is enabled or disabled.

Adding Volumes

▼ To add media to LMF robots

1. Add barcode labels and then insert the media into the robot using the media access port.

2. Define the media to Media Manager using the LMF volume IDs as media IDs. To accomplish this, do one of the following:

   - Update the volume configuration, as explained in "Updating the Volume Configuration for a Robot" on page 174.

   - Add new volumes, as explained in "Adding New Volumes" on page 128.

3. Use **Show Contents** and **Compare Contents with Volume Configuration** from the Media and Device Management Robot Inventory dialog to verify your configuration.

Removing Volumes

▼ **To remove media from LMF robots**

1. Physically remove the media from the library using a Fujitsu LMF administrative interface or the `eject` command from the Media Manager test utility, `lmftest`.

2. Update the Media Manager volume database to indicate the new location of the media as being standalone. To accomplish this, do one of the following:

   - Update the volume configuration, as explained in "Updating the Volume Configuration for a Robot" on page 174.
   - Move volumes, as explained in "Moving Volumes" on page 141.

   Otherwise, Media Manager will not be aware that the media is missing and may issue mount requests for it. The result will be an error such as Misplaced Tape.

Robot Inventory Operations

Media Manager considers a LMF robot as one that supports barcodes. The following sequence explains what occurs when you select an operation that requires a robotic inventory for a LMF robot.

1. Media Manager requests volume information from the library through the LMF Server or LMF Client.

2. The LMF Server or Client responds by providing a list of volume IDs and volume attributes from its database. Media Manager then filters out volumes that do not belong to the specified robot or have a volume ID longer than 6 characters. Media manager displays a list of volumes along with a translated version of the volume's media type. The media type is based upon the attributes that were returned.

   The table below is an example of LMF information displayed by Media Manager:

LMF Volume ID	LMF Media Type
AJS147	18 / 36TRK
ZZ9999	128TRK

3. Media Manager translates the volume IDs directly into media IDs and barcodes. In the previous table, volume AJS147 becomes media ID AJS147 and the barcode for that media ID is also AJS147.

4. If the operation does not require updating the volume configuration, Media Manager uses the media type defaults for LMF robots when it creates its report.

   "How Contents Reports for API Robots are Generated" on page 170 shows an example of this report.

5. If the operation requires updating the volume configuration, Media Manager maps the LMF media types to the Media Manager media types, as explained in "Media Type Mappings Tab (Advanced Options)" on page 201.

   The Update Volume Configuration report for an LMF robot is similar to the figure shown for an API robot in "Procedure To Update the Volume Configuration" on page 177.

Robotic Inventory Filtering

If your site has many volumes configured, but you only want NetBackup to use a subset of them, you may be able to use inventory filtering.

On the Media Manager server where the inventory request will be initiated, you can add an `INVENTORY_FILTER` entry in the `vm.conf` file. The format for this entry follows:

`INVENTORY_FILTER` = LMF *robot_number* `BY_PREFIX` *value1* `[`*value2* `. . .]`

where

- *robot_number* is the robot number.
- *value1* is the prefix of the volume IDs you want to use.
- *value2* is a second volume ID prefix (up to 10 filter values are allowed).

For example: `INVENTORY_FILTER = LMF 47 BY_PREFIX AJS`

Index

Symbols

/etc/ibmatl.conf file 499

A

accessibility features xxxv
ACS (see Automated Cartridge System)
ACS or TLM robot types 278, 291
ACS, TL8, TLD, TLH, or TLM robot types 275
ACS, TLH, or TLM robot types 275
ACS_ vm.conf entry 380
ACS_CSI_HOSTPORT, vm.conf entry 381
ACS_SEL_SOCKET, vm.conf entry 381
ACS_SSI_HOSTNAME, vm.conf entry 382
ACS_SSI_INET_PORT, vm.conf entry 382
ACS_SSI_SOCKET, vm.conf entry 383
acsd daemon 257, 484
acssel 487
acsssi 485
acstest 481, 488, 489
adding
  cleaning tapes 73
  drives 61, 406
  robot 48, 405
  shared drives 59
  volume pool 119, 415
  volumes
    actions menu 132
    nonrobotic 418
    robotic 424, 426, 429
    update volume configuration 131
ADIC Automated Media Library (AML) 507
ADIC software, installing 509
ADJ_LSM, vm.conf entry 383
administrative interfaces
  character based 12
  Java 9
administrator quick reference 374
advanced configuration topics 357
advanced options, robot inventory 166, 178
Allow Backups to Span Media 364
Allow Media Overwrite 360
allowable Media Manager characters 34, 115, 236
allowing nonroot users 374
alternate media types
  ACS robots 476
  defined 305
  example 305
AML (see Distributed AML Server)
AMU (see Archive Management Unit)
API robots 2, 146, 178, 201, 345, 402, 426, 428, 430, 437, 456, 462, 473, 493, 507, 519
API_BARCODE_RULES, vm.conf entry 384
Arbitrated Loop Physical Address (ALPA) 285
Archive Management Unit (AMU) 508
assigned
  host, drive status 231
  volumes 153
assigning tape requests 245
ATL (see Automated Tape Library)
authentication/authorization 41, 369
AUTHORIZATION_REQUIRED, vm.conf entry 384
auto cleaning 288, 333
AUTO_UPDATE_ROBOT, vm.conf entry 385
Automated Cartridge System
  adding volumes 481
  barcode operations 482
  configuration example 92
  daemon, acsd 257
  drive information 68
  Library Server (ACSLS) 473, 475
  media requests 475
  removing tapes 481

special characters 481
STK Library Station 473, 475
Storagenet 6000 (SN6000) 473, 475, 479
Automated Tape Library (ATL) 496
Automatic Volume Recognition (AVR) setting 226
Automatic Volume Recognition (avrd), daemon 256
auto-populate robot 424
AVRD_PEND_DELAY, vm.conf entry 327, 386
AVRD_SCAN_DELAY, vm.conf entry 385

B

Backup Exec, managing volumes 101, 165, 244
barcode rules
add 192, 469
change 193, 471
delete 471
list 471
overview 345
tag 194
barcodes
overview 343
update in robot 165, 220, 451
bp.conf file 328, 359
bpclntcmd utility 274
bpexpdate command 154

C

changing
cleaning frequency 65, 75, 242
cleanings allowed 159, 337
drive configuration 71
host
for Device Monitor 238
for standalone drives 72
media description 158, 444
robot configuration 70
shared drive configuration 71, 72
volume attributes 155
volume expiration date 157, 445
volume group 446
volume group name 159
volume maximum mounts 157, 450
volume pool attributes 121, 415
volume pool for a volume 122, 158, 444
character device 65, 406
CLEAN_REQUEST_TIMEOUT, vm.conf entry 386
cleaning
count 113
drives 73, 241, 503, 528
frequency-based 74, 241, 333, 335
library-based 333
operator-initiated 75, 242, 333
reactive 333
cleaning tape
adding 73
change cleanings allowed 159, 337, 451
number of cleanings left 113
set count 138
CLIENT_PORT_WINDOW, vm.conf entry 386
cluster environments 329, 394
CLUSTER_NAME, vm.conf entry 394
comment
drive, adding 243
in drive status list 232
configuration analyzer 227, 286
configuring
devices 271
drives and robots 17, 35, 401
examples, drives and robots 82
media 45, 128, 413
STK SN6000 drives 480
TLM drives 509
CONNECT_OPTIONS, vm.conf entry 386
control mode, drive 228
control path, robotic 54, 401
control unit, ACS 475
crawlreleasebyname, vmoprcmd option 326
create media ID generation rules 178
customize
Device Monitor window 235
Devices window 32
Media window 115

D

daemons
acsd 257
avrd 256
check with vmps 261
lmfcd 257
lmfd 257
ltid 255
odld 258
overview 253

robotic 260
stopping 260
tl4d 258
tl8cd 258
tl8d 258
tldcd 258
tldd 258
tlhcd 259
tlhd 259
tlmd 259
ts8d 259
tsdd 259
tshd 260
vmd 256
DAS (see Distributed AML Server)
DAS drive name 26
DAS_CLIENT, vm.conf entry 387, 510
DASADMIN command 511, 513
data loss 322
DataStore volume pool 338, 415
DAYS_TO_KEEP_LOGS, vm.conf entry 388
deassign volumes 153
decommission a media server 358
deleting
drive 73, 409
robot 410
volume group 148, 443
volume pool 123, 418
volumes 147, 441, 442
density for media types 234
denying requests 249
description, for new volume 137
device
character 65
configuration analyzer 21
configuration wizard 13, 14, 45, 59, 61, 70, 278, 286, 478, 515
discovery 34, 46, 318
drivers 271, 272
file permission 267
files 272
no rewind 65
volume header 65
device allocation host 275, 291, 293
Device Configuration wizard 329, 478, 515
device databases 302
device file, robotic 54, 405, 406
device host
for move volume 145
for new volume 135
viewing remotely 38
device management
daemons 253
starting ltid 255
stopping ltid 256
device mapping file 36
Device Monitor
add drive comment 243
assigning requests 245
changing host 238
display pending requests 243
display the window 224
overview 223
resubmit request 248
DEVICE_HOST, vm.conf entry 388
Devices management window
displaying 18
menus 19
toolbar 21
DISABLE_SCSI_RESERVE bp.conf entry 328
DISABLE_STANDALONE_DRIVE_EXTENSIONS 129
DISALLOW_NONNDMP_ON_NDMP_DRIVE, vm.conf entry 388
display device configuration 411
Distributed AML Server
\ETC\CONFIG file 513
\MPTN\ETC\HOSTS file 513
overview 507
Distributed AML Server (also see Tape Library Multimedia)
DO_NOT_EJECT_STANDALONE, vm.conf entry 389
down a device 361
down drive, setting 226
drive
access permission 267
ACS information 407
add (see adding)
add comment 243
changing operating mode 238
character device 65, 406
cleaning 21, 227, 276, 288
cleaning frequency 65, 242
control mode 228
delete (see deleting)
diagnose tests 21

dip switches 274
drive status 66
LMF information 407
monitoring use 223
name 406
no rewind device 65, 406
performing diagnostics 76
reset 240
robot drive number 67, 407
robot library, controlling drive 67
robot number, controlling drive 407
servicing requests 243
Sony dip switches 277
standalone 66, 407
standalone volume database host 72
TLH information 68, 407
TLM information 69, 407
type 64, 406
types and densities 231
update configuration (see updating)
virtualization 479
volume header device 65, 406
drive cleaning
for LMF robots 528
for TLH robots 503
managing 336
manual 336
Media and Device Management menu 73, 241
operator-initiated 336
drive_mount_notify script 264
drive_unmount_notify script 266
Drives List, Devices window 25
Drives status list
Assigned Host field 231
Comment field 232
Control field 228
Device Monitor window 228
Drive Index field 230, 232
Drive Name field 228
External Media ID field 232
Last Cleaned field 232
Media Label field 231
Ready field 232
Recorded Media ID field 232
Request ID field 232
Shared field 231
Type field 231
User field 231
Writable field 232
drstat command 318

E

eject volume from robot
for move volume 144, 146
menu command 104
methods available 126
multiple volumes 104
empty media access port prior to update 178
ENABLE_AUTO_PATH_CORRECTION, vm.conf entry 389
ENABLE_ROBOT_AUTH, vm.conf entry 389
enhanced authorization
allowable Media Manager commands 373
allowing 374
erasing media 151
examples
SAN components 270
SSO components configuration 290
expired media 120, 122
External Media ID
drive status 232
pending requests 233

F

fibre channel
arbitrated loop 270
hub 270
switch 270
switched fabric 270
file
name on tpreq 264
positioning to on tape 265
filter, volume list 433
find command 20, 103, 225
firmware levels 272, 285
first media ID, add volume range 137
First Mount field 113
first slot number
add volumes 137
for move volumes 146
format description for optical 367
format optical media 472
fragmented backups 367
frequency-based drive cleaning 74, 241, 276, 288, 335

G

get_license_key command 277
global device database host
chosing 43
conflict 42, 46
default 43
tpconfig 410
glossary of terms 1
Glossary. *See* NetBackup Help.

H

host
device 7
for Device Monitor 238
for robotic control 57
for standalone drives 72
for volume pool 120, 121
volume database 7, 51
host name, selection
for volume database 403
robotic control 402, 405
Hosts List, Devices window 31
HyperTerminal 273

I

IBM Automated Tape Library 493
(also see Tape Library Half-inch)
IBM device number 26, 68, 318, 407, 502
images, expiring with bpexpdate 154
inject volume into robot
add volume 140, 428
for move volume 147
methods available 124
multiple volumes 178
robot inventory 125
install and configure ADIC software 509
inventory a robot and report contents 452
inventory and compare robot contents 172, 454
inventory and update robot 456
INVENTORY_FILTER, vm.conf entry 390

K

key Media Manager terms 1

L

label
media tapes 130
new media 150
optical media 185
launch SANPoint Control 21, 79, 227
Library Management Facility
adding volumes 528
cleaning drives 528
configuring drives 527
configuring robotic control 524
daemon 257
drive mapping 527
removing volumes 529
Library Management Unit 475
Library Manager Control Point daemon (LMCPD) 496
library sharing 53, 289
Library Storage Module 475
library-based cleaning 288, 335
license keys 269, 277, 480
LMCP device file 497
LMCPD 496
LMF (see Library Management Facility)
LMF_ vm.conf entry 390
lmfcd daemon 257, 523
lmfd daemon 257, 523
LMU (see Library Management Unit)
logging 261
long erase 104, 152
LSM (see Library Storage Module)
ltid
daemon 255
debug logging 255, 260
starting 255
stopping 256

M

making advanced configuration changes 357
MAP_ID, vm.conf entry 391
master server 6
maximum barcode lengths 344
maximum concurrent drives for backup 279
maximum mounts
add volume 138
change volumes 157, 450
media
catalog 301
density 234
formats 366
mount and unmount 361
recycling 164
replacing 162
selection algorithm 362, 364

servers 7
spanning 363, 365
media ID
generation rules 200, 347, 425, 457
prefix for update robot 184
style for new volumes 136
media ID, add volume 137
Media management window
displaying 102
menus 19, 103
toolbar 104
Media Manager
overview 5
allowable characters 34, 115, 236
authentication / authorization
security 370
best practices 296
configuration file 379
hosts, overview 6
security 40, 41, 369, 371
terminology 1
volume daemon (see vmd)
media pool (see volume pool)
media server 289
media settings tab 167
media type
4MM 304
4MM_CLN 305
8MM 304
8MM_CLN 305
8MM2 304
8MM2_CLN 305
8MM3 304
8MM3_CLN 305
DLT 304
DLT_CLN 305
DLT2 304
DLT2_CLN 305
DLT3 304
DLT3_CLN 305
DTF 304
DTF_CLN 305
for new volume 134
HC_CLN 304
HC2_CLN 304
HC3_CLN 304
HCART 304
HCART2 304
HCART3 304
QCART 304
REWR_OPT 304
when not an API robot 186
WORM_OPT 304
media type mappings (API robots) 201
MEDIA_ID_BARCODE_CHARS, vm.conf entry 391
MEDIA_ID_PREFIX, vm.conf entry 392
MM_SERVER_NAME, vm.conf entry 394
mount media 361
mount requests, pending 243
move volume group 160
move volumes
logical move 343
methods available 141
multiple volumes 435, 438
overview 141, 343
physical move 343
single volume 435, 436
update volume configuration 142
volume group 440
mtlib command, IBM 498
multiplexed backups 368
multiplexing (MPX) tape format 368

N

naming conventions 34, 115, 236
NDMP configurations 276, 278, 329
NDMP hosts 45
NetBackup
authentication 369
authorization 369
patches 37
pool 107, 112
volume pool 123, 415
wizards 10
NetBackup Administration Console 9
NetBackup and Media Manager databases 300
NetBackup catalogs 301
NetBackup Enterprise Server 117, 237, 269
NetBackup Server 117, 237
NetBackup Vault
date returned 448
date sent 447
session ID 449
slot 449
vault name 447
no rewind device 65, 406

NOT_DATABASE_HOST, vm.conf
entry 116, 297, 393
number of platters 136
number of volumes 135

O

odld daemon 258
online help
tpconfig 404
vmadm 415, 418
operating mode of drive, changing 238
operating system changes 273
optical disk
format 367
format and label 472
partner ID 113
platter side 112
usage 266
Optical Disk Library (ODL) daemon 258
optical partner (see Partner ID)
optical volumes 136, 137, 140, 144
overview of
barcodes 343
daemons 253
drive cleaning 333
Media Manager 5
robots 302
shared drives 269
vmadm 413
volume groups 338
volume pools 338

P

partially-configured devices 47
pending actions
notation 244
overview 244
resolving 247
pending requests
Barcode field 234
Density field 234
External Media ID field 233
Host Name field 233
Mode field 234
Recorded Media ID field 233
Request ID field 233
Time field 234
User field 233
Volume Group field 234
permissions, for device access 267
physical inventory utility 348
positioning tape files 265
PREFERRED_GROUP, vm.conf entry 393
pre-labeling media 360
PREVENT_MEDIA_REMOVAL, vm.conf
entry 393
preview volume configuration update 178
printing
device configuration 411
volumes report 432
processes
check with vmps 261
robotic 253
robotic control 254

Q

quick erase 104, 152

R

RANDOM_PORTS, vm.conf entry 394
rdevmi 292
reactive cleaning 333
reading tape files 264
ready status 232
recommended method of configuring
devices 45
reconfiguring devices in a SSO
configuration 357
Recorded Media ID
drive status 232
pending requests 233
recycle media 164
refresh rate, changing 236
relabeling media 150
remote device management 37
Removable Storage Manager (RSM)
robot types 50
remove a server from a configuration 358
removing tape files 265
replace media 162
replacing a device in a SSO
configuration 357
requests
assigning 245
denying 249
display pending 243
example assignment 246
identification number
drive status 232
pending requests 233

overview 243
resubmitting 248
user tape 263
REQUIRED_INTERFACE, vm.conf entry 394
RESERVATION CONFLICT status 326
reset
drive 240
mount time 75, 242
residence, update volume configuration 176
retention period, expiring backups with bpexpdate 154
RETURN_UNASSIGNED_MEDIA_TO_SCRATCH_POOL, vm.conf entry 395
rewinding tape files 265
right-click shortcut menus 12, 31, 114, 235
robot
add (see adding)
attributes 305
barcode rules 191, 467
barcode update 220, 451
cleaning 288
control host 57, 405
delete (see deleting)
destination for move volume 145
device file 54, 405, 406
device host 49
drive number 67
for new volume 135
inventory 140, 165
inventory and compare contents 172, 454
number 50, 405
process 253
robotic daemons 260
sharing 289
show robot contents 452
type 49, 405
update configuration (see updating)
update volume configuration 174, 456
volume database host 51, 405
robot number
for add drive 407
for add robot 405
robot type
ACS 303
LMF 303
ODL 303
RSM 303
TL4 303
TL8 303
TLD 303
TLH 303
TLM 303
TS8 303
TSD 303
TSH 303
robotic
cleaning 333
control host 57, 402, 405
control process 254
device file 54
drive 407
library 67
test utilities 318, 489
robotic control path (see robotic device file)
robotic inventory
advanced options 167
filtering 491, 505, 530
Robots List
Devices window 29
Media window 109
robtest 318, 375, 488, 514

S

SAN media server 7, 289
SAN Shared Storage Option (see SSO)
SANPoint Control 21, 79, 227
scan host 291, 292
scratch pool 417
adding 120
changing to 122, 418
overview 340
SCRATCH_POOL, vm.conf entry 395
scripts
drive_mount_notify 264
drive_unmount_notify 266
vmps 261
SCSI Long Erase 152
SCSI Quick Erase 151
SCSI reserve/release
break a reservation 323
controlling use of 328
crawlreleasebyname option 326
error recovery 326
in NetBackup 322, 323
limitations 327, 329
overview 321
PEND status 326

requirements 328
RESERVATION CONFLICT 322, 326
SCSI-to-fibre
bridges 273
mapping 272
SERVER, vm.conf entry 40, 396
shared drives (see SSO)
shared drives, definition 289
shared media 276
shared storage option, key 269, 277
shared_drive_notify script 270
shortcut menus 12, 31, 114, 235
show robot contents 169, 452
slot number
add volume 137
for move volumes 146
Sony AIT tape drives 277
spanning media 363
enabling 363, 365
tape format 368
SSO
configuration wizards 21, 45, 59, 60, 71, 278
configuring shared ACS drives 478
configuring shared TLM drives 515
configuring TLM robot types 513, 514
definition 269
device allocation host 275, 290, 293
Device Allocation Host Summary 250
drive cleaning 336
drive comment 243
drive operating mode 239, 242
hardware requirements 269
license key 480
scan host 291, 292
Shared Drive Summary 250
supported robot types 275
supported SAN hardware 288
supported server platforms 275
terminology 289
tpconfig 406
unsupported robot types 275
vm.conf entries 396, 397
SSO_DA_REREGISTER_INTERVAL, vm.conf entry 396
SSO_DA_RETRY_TIMEOUT, vm.conf entry 396
SSO_HOST_NAME, vm.conf entry 397
SSO_SCAN_ABILITY, vm.conf entry 230, 397
standalone drive
add drive 66
standalone extensions, disabling 365
tpconfig 407
volume database host 72
stopltid command 256
Storage Area Network (SAN) 7, 270, 271, 276, 284, 289
storage devices, steps for attaching 34
supported
robot types 275
SAN hardware 288
server platforms 275
suspend media 361
syslogd 261

T

table-driven robotics 317
tape configuration utility (see tpconfig)
tape format
fragmented 367
multiplexed 368
non-QIC 367
QIC 367
spanned tapes 368
Tape Library (TLD) daemon 258
Tape Library 4MM (TL4) daemon 258
Tape Library 8MM (TL8) daemon 258
Tape Library Half-inch (TLH)
adding volumes 503
cleaning drives 503
configuration example 95
configuring robotic control 497
control daemon 259, 496
daemon 259, 496
drive information 68
drive mapping 502
media requests 496
removing tapes 503
robot inventory 504
Tape Library Multimedia (TLM)
adding volumes 516
allocating drives 509
configuration example 97
configuring drives 512
configuring robotic control 509
daemon 259, 508
drive information 69

drive mapping 512
inventory operations 517
media requests 509
overview 507
removing tapes 517
tape spanning 363, 365
Tape Stacker 8MM (TS8) daemon 259
Tape Stacker DLT (TSD) daemon 259
Tape Stacker Half-inch (TSH) daemon 260
TapeAlert 6, 65, 276, 288, 333
tapes and tape files
assigning requests 245
density 263
example of handling a request 246
file name 264
labels 231
mode 234
positioning tape file 265
reading tape files 264
removing tape files 265
requesting tapes 263
rewinding 265
time requested 234
using optical disk 266
volume pool assignment 264
writing tape files 264
terminating drive assignment 240
tested SAN components 288
tl4d daemon 258
tl8cd daemon 258
tl8d daemon 258
tldcd daemon 258
tldd daemon 258
TLH_ vm.conf entry 398
tlhcd daemon 259
tlhd daemon 259
TLM_ vm.conf entry 398
tlmd daemon 259
tlmtest 512, 514, 516, 517
toolbars, viewing and customizing 104
tpautoconf 357
tpautoconf command 42, 297
tpconfig
adding drive 406
adding robot 405
deleting drive 409
deleting robots 410
menus 404
online help 404
overview 401
printing device configuration 411
starting 403
stopping 404
update drive configuration 408
update robot configuration 408
update volume database hostname 410
tpconfig menus 61
tpreq, requesting tapes 263
tpunmount, removing tape files 265
ts8d daemon 259
tsdd daemon 259
tshd daemon 260

U

unmount media 361
unsupported
characters 180
robot types 275, 276
up drive, standard mode (AVR) 226
update and rescan barcodes 220
update barcodes 220
update robot
procedure 177, 456
update options 460
update volume configuration
when not to use 176
when to use 175
updating
barcodes 451
drive configuration 408
robot configuration 408
volume database hostname 410
user
access to devices 267
tape requests 263
User field
drive status 231
pending requests 233
using Media Manager devices with other applications 296

V

VAULT_CLEAR_MEDIA_DESC, vm.conf entry 399
VERBOSE, vm.conf entry 399
VERITAS Backup Exec 276, 289
VERITAS Storage Migrator 15, 274, 276, 290
VERITAS support web site 36
vm.conf file

ACS_ entries 380
ACS_CSI_HOSTPORT entries 381
ACS_SEL_SOCKET entries 381
ACS_SSI_HOSTNAME entries 382
ACS_SSI_INET_PORT entries 382
ACS_SSI_SOCKET entries 383
adding SERVER entries 40
ADJ_LSM entries 383
API_BARCODE_RULES entries 384
AUTHORIZATION_REQUIRED entries 384
AUTO_UPDATE_ROBOTentries 385
AVRD_PEND_DELAY entries 386
AVRD_SCAN_DELAY entries 385
CLEAN_REQUEST_TIMEOUT entries 386
CLIENT_PORT_WINDOW entries 386
CLUSTER_NAME entries 394
CONNECT_OPTIONS entries 386
DAS_CLIENT entries 387, 510
DAYS_TO_KEEP_LOGS entries 388
DEVICE_HOST entries 388
DISALLOW_NONNDMP_ON_NDMP_DRIVE entries 388
DO_NOT_EJECT_STANDALONE entries 389
ENABLE_AUTO_PATH_CORRECTION entries 389
ENABLE_ROBOT_AUTH entries 389
INVENTORY_FILTER entries 390
LMF_ entries 390
MAP_ID entries 391
MEDIA_ID_BARCODE_CHARS entries 391
MEDIA_ID_PREFIX entries 392
MM_SERVER_NAMEentries 394
NOT_DATABASE_HOST entries 393
overview 379
PREFERRED_GROUP entries 393
PREVENT_MEDIA_REMOVAL entries 393
RANDOM_PORTS entries 394
REQUIRED_INTERFACE entries 394
RETURN_UNASSIGNED_MEDIA_TO_SCRATCH_POOL entry 395
SCRATCH_POOL entries 395
SERVER entries 396
SSO_DA_REREGISTER_INTERVAL entries 396
SSO_DA_RETRY_TIMEOUT entries 396
SSO_HOST_NAME entries 397
SSO_SCAN_ABILITY entries 397
TLH_ entries 398
TLM_ entries 398
VAULT_CLEAR_MEDIA_DESC entries 399
VERBOSE entries 399
vmadm
overview 413
add volume (see adding)
barcode update 451
change volume's volume pool 444
changing
media description 444
volume expiration date 445
volume maximum mounts 450
command 413
deleting
multiple volumes 442
single volume 441
volume group 443
displaying volume configuration 432
format optical disk 472
inventory and report robot contents 452
media configuration, changing
description 444
moving volume group 440
moving volumes (see move volumes)
online help 415, 418
printing volume configuration 432
starting vmadm 413
stopping vmd 414
verify robot contents 454
verify selected robot volumes 451
volume configuration
barcode rules 467
update robot 456
vmd 289
command 256, 413
daemon 253, 256
starting 256
by command 256, 413
using vmadm 413
stopping 257, 414
vmd/DA, definition 289
vmdb_merge command 8, 116, 297, 411
vmps script 261
Volume Configuration wizard 13, 14, 45, 140

volume database host
changing 410
for robot 51
recommendations 275, 286
requirements 275
selecting 116
with tpconfig 61
volume group
add volume 139
changing 446
changing name 159
deleting 148
deleting (see deleting)
field 234
for move volume 146
moving 160
rules for assigning 338
Volume Groups list, Media window 108
volume header device 406
volume is in a robotic library
for move volume 144
for new volume 135
volume pool
add volume 139
adding 119
change assignment 444
changing attributes 121, 415
changing for a volume 122
configuring a scratch pool 122, 340
DataStore pool 107
deleting 123
for update robot 191
host name 120, 121
HSM pool 107
NetBackup pool 107, 112
overview 16, 118, 337
Volume Pools list, Media window 107
volumes
adding (see adding)
assigned 153
changing (see changing)
changing configuration (see changing)
cleaning count 159
deleting (see deleting)
description for new volume 137
description, changing 444
first time mounted 113
for move volume 144
header device 65
list 432
maximum mounts allowed 138
media ID style 136
moving 141, 343
moving (see move volumes)
moving, actions menu 142
platter side 112
recycling 164
replacing 162
without barcodes 6, 101
Volumes list, Media window 111

W

wizard
device configuration 13, 14, 45, 59, 70, 272, 286, 329
shared drive configuration 13, 14, 21, 59, 71, 278
volume configuration 13, 14
Writable field 232
writing tape files 264